THE WESTINGHOUSE AIR BRAKE INSTRUCTION BOOK

TF
425
W51

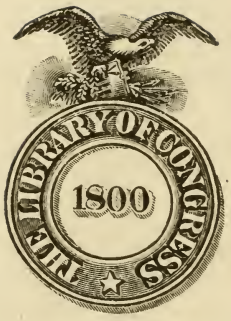

Class TF42.5

Book .W51

Copyright No.

COPYRIGHT DEPOSIT.

THE LIBRARY
OF CONGRESS

TK42B
.W51

TF475
.W51

THE LIBRARY OF
CONGRESS,
ONE COPY RECEIVED
JAN. 8 1902
COPYRIGHT ENTRY
Dec. 12-1901
CLASS a XXc. No.
22775
COPY B.

Copyright, 1901, by
The Westinghouse Air Brake Company
Pittsburg, Pa.

THE LIBRARY
OF CONGRESS

2-1425

AIR BRAKE

INSTRUCTION BOOK

OF

THE WESTINGHOUSE AIR BRAKE COMPANY

OFFICERS

George Westinghouse,	President
H. H. Westinghouse,	Vice-President
E. M. Herr,	General Manager
W. W. Card,	Secretary
John Caldwell,	Treasurer
John F. Miller,	Assistant Secretary

Pittsburg, Pa., 1901.

INDEX.

	Page.
Preface,	3
Westinghouse Quick-Action Automatic Brake—General Description,	5
Nine and One-half-inch Air Pump,	11
Eight-inch Air Pump,	15
Air-Pump Governor,	19
Main Reservoir,	22
"G–6" Engineer's Brake Valve,	24
Slide-Valve Feed Valve,	32
Old-Style Feed Valve,	37
"D–8" Engineer's Brake Valve,	39
Quick-Action Triple Valve,	47
Plain Triple Valve,	52
Combined Freight-Car Cylinder, Reservoir and Triple Valve,	55
Pressure-Retaining Valve,	58
Piston Travel,	61
Automatic Slack Adjuster,	64
Train Air-Signal System,	71
High-Speed Brake,	76
Automatic Reducing Valve,	78
High-Pressure Control, or Schedule U,	84
Handling Brakes in Train Service,	87
Piping,	93
Lubricants,	93
Brake Inspection and Maintenance,	94
Foundation Brake Gear,	98
Leverage,	101
American Driver Brake,	114
Cam Driver Brake,	117
Locomotive-Truck Brake,	118

PREFACE.

The present edition of our Instruction Book is in the nature of a revision of our previous publications. It has been our aim to condense and simplify the descriptive matter as much as possible, and at the same time to present a complete description of the parts and their operation in the air-brake and air-signal equipment. In it will be found illustrations and explanations of the new devices, as well as of any modifications of older appliances which have been made with the idea of furnishing the best possible air-brake and air-signal equipment.

We have distributed many thousand copies of previous editions of our Instruction Book among railway officers and employees in this and other countries, the net result of which has been the education of railroad men in the subject of air brakes, to such an extent that we are led to believe that much of the matter heretofore published can be consistently omitted, especially as there are now many other publications which deal with brake subjects at greater length and provide a source of information in detail, which may be referred to, if desired. For this reason, the present edition of our Instruction Book has been somewhat abridged and presents a terse description of the functions and methods of operation of the devices supplied by this company for the equipment of railroads with its air-brake and air-signal apparatus.

We shall, in the future, as in the past, be pleased to furnish these books gratuitously, upon request of heads of departments.

THE WESTINGHOUSE AIR BRAKE CO.

November, 1901.

The
American
Machinist
Press
N Y.

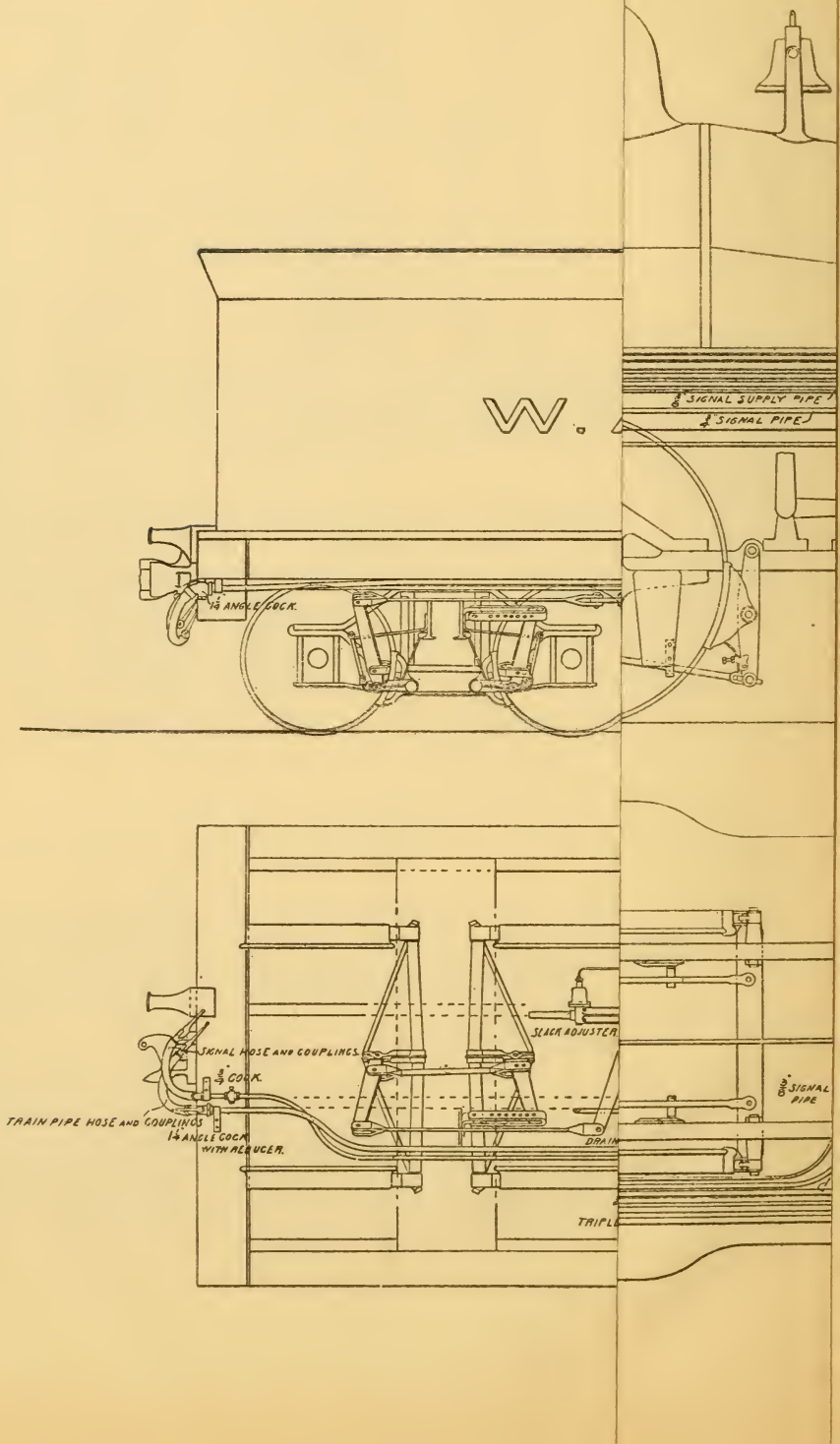
W.
¾ SIGNAL SUPPLY PIPE
¾ SIGNAL PIPE
¼ ANGLE COCK.
SLACK ADJUSTER.
SIGNAL HOSE AND COUPLINGS
¾ COCK.
TRAIN PIPE HOSE AND COUPLINGS
¼ ANGLE COCK WITH REDUCER.
DRAIN
¾ SIGNAL PIPE
TRIPLE

The Westinghouse Quick-Action Automatic Brake.

General Description.

The Westinghouse Quick-Action Automatic Brake consists of the following essential parts :

First—The Steam-Driven Air Pump, which supplies the compressed air.

Second—The Main Reservoir, in which the compressed air is stored.

Third—The Engineer's Brake Valve, which regulates the flow of air from the main reservoir into the trainpipe for charging and releasing the brakes, and from the trainpipe into the atmosphere for applying the brakes.

Fourth—The Air Gauge, which, being of the duplex pattern, shows simultaneously the pressures in the main reservoir and in the trainpipe.

Fifth—The Pump Governor, which regulates the supply of steam to the pump, stopping it when the maximum air pressure desired has been accumulated in the air-brake apparatus.

Sixth—The Trainpipe, which connects the engineer's brake valve with the main-reservoir and with each triple valve in the train, and includes flexible hose and couplings between cars.

Seventh—The Auxiliary Reservoir, which is supplied with air from the main reservoir, through the trainpipe and triple valve, and stores it for use upon its own vehicle.

Eighth—The Brake Cylinder, the piston rod of which is connected to the brake levers in such a manner that, when the piston is forced outward by air pressure, the brakes are applied.

Ninth—The Quick-Action Triple Valve, which is

PLATE I.

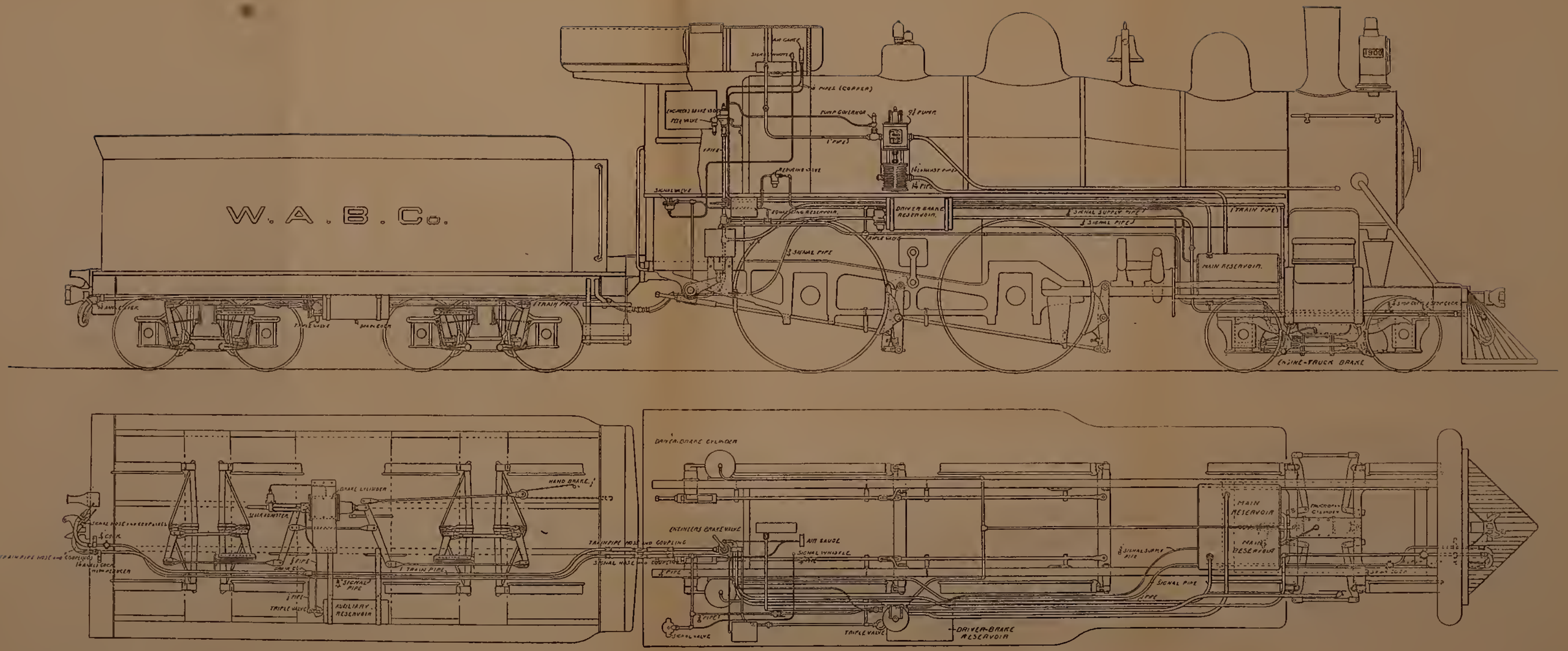
W. A. B. Co.
1900
PUMP GOVERNOR
PUMP
REDUCING VALVE
SIGNAL VALVE
EQUALIZING RESERVOIR
DRIVER BRAKE RESERVOIR
SIGNAL SUPPLY PIPE
SIGNAL PIPE
TRAIN PIPE
MAIN RESERVOIR
ENGINE-TRUCK BRAKE
TRIPLE VALVE
BRAKE COCK
HAND BRAKE
BRAKE CYLINDER
SELLER ADJUSTER
AUXILIARY RESERVOIR
DRIVER-BRAKE CYLINDER
ENGINEERS BRAKE VALVE
AIR GAUGE
SIGNAL WHISTLE
DRIVER-BRAKE RESERVOIR

suitably connected with the trainpipe, auxiliary reservoir, brake cylinder and pressure-retaining valve, and which operates, by variations of the air pressure in the trainpipe, (1) to admit air from the auxiliary reservoir (and, when required, as will be explained hereafter, from the trainpipe) to the brake cylinder, thereby applying the brakes, and at the same time to cut off communication from the trainpipe to the auxiliary reservoir, and (2) to restore communication between the trainpipe and the auxiliary reservoir, and at the same time to discharge the air from the brake cylinder to the atmosphere, thereby releasing the brakes.

Tenth—The Hose Couplings, which are attached to flexible hose and unite the trainpipe of adjoining vehicles.

Eleventh—The Pressure-Retaining Valve, which, when used, prevents complete discharge of the air from the brake cylinder, retaining a pressure of fifteen pounds therein when the brakes are released.

Twelfth—The Automatic Slack Adjuster, which automatically maintains a constant travel of the piston in the brake cylinder, by taking up the slack as the brake shoes wear.

Plate 1 shows the usual arrangement of apparatus and piping upon a locomotive and tender, while Plate 2 diagrammatically illustrates, in section, the essential parts of the brake system and their relative location, as usually applied to railroad trains.

The operations of the brake are controlled by the triple valve, the primary parts of which are a piston and slide valve. A moderate reduction of air pressure in the trainpipe causes the greater pressure remaining stored in the auxiliary reservoir to force the piston and its slide valve to a position which allows the air in the auxiliary reservoir to pass into the brake cylinder and apply the brake; a sudden

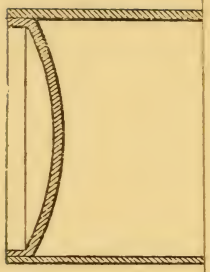

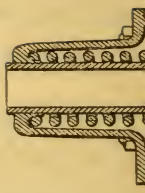

CONDUCTOR'S VALVE

AUXILIARY

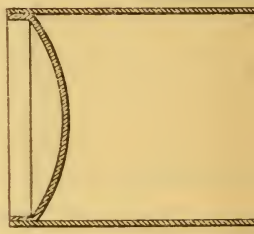

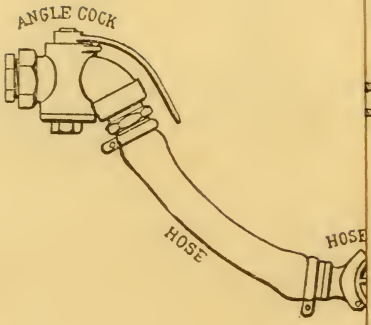

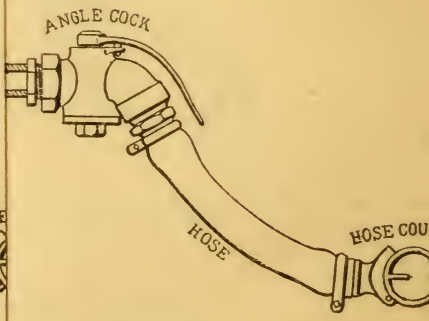

or violent reduction of the air in the trainpipe produces the same effect, but, in addition (if a quick-action triple valve), it causes supplemental valves to be opened, permitting the air from the trainpipe to also enter the brake cylinder, thereby producing a brake-cylinder pressure about 20 per cent. greater than that derived from the auxiliary reservoir alone and producing a practically instantaneous application of the brakes throughout the train. When the pressure in the trainpipe is subsequently increased above that remaining in the auxiliary reservoir, the piston and slide valve are forced in the opposite direction to their normal positions, thereby restoring communication between the trainpipe and the auxiliary reservoir and permitting the air in the brake cylinder to escape to the atmosphere through the triple-valve exhaust port, connecting pipe, and pressure-retaining valve, thus releasing the brakes, and at the same time recharging the auxiliary reservoirs. When the pressure-retaining valve is in operation, it arrests the discharge to the atmosphere when the pressure in the brake cylinder has become reduced to fifteen pounds.

When the engineer wishes to apply the brakes, he moves the handle of the engineer's brake valve to the right, which cuts off communication with the main reservoir and permits a portion of the air in the trainpipe to escape; to release the brakes, he moves the handle to the extreme left, which allows air to flow from the main reservoir into the trainpipe, restoring the pressure therein.

A device called the Conductor's Valve is placed in each passenger car, to which is attached a cord that runs throughout the length of the car. By pulling this cord, the valve is opened and discharges air from the trainpipe, applying the brakes. When the train has been brought to a full stop in this manner, the valve must be closed.

PLATE 2.

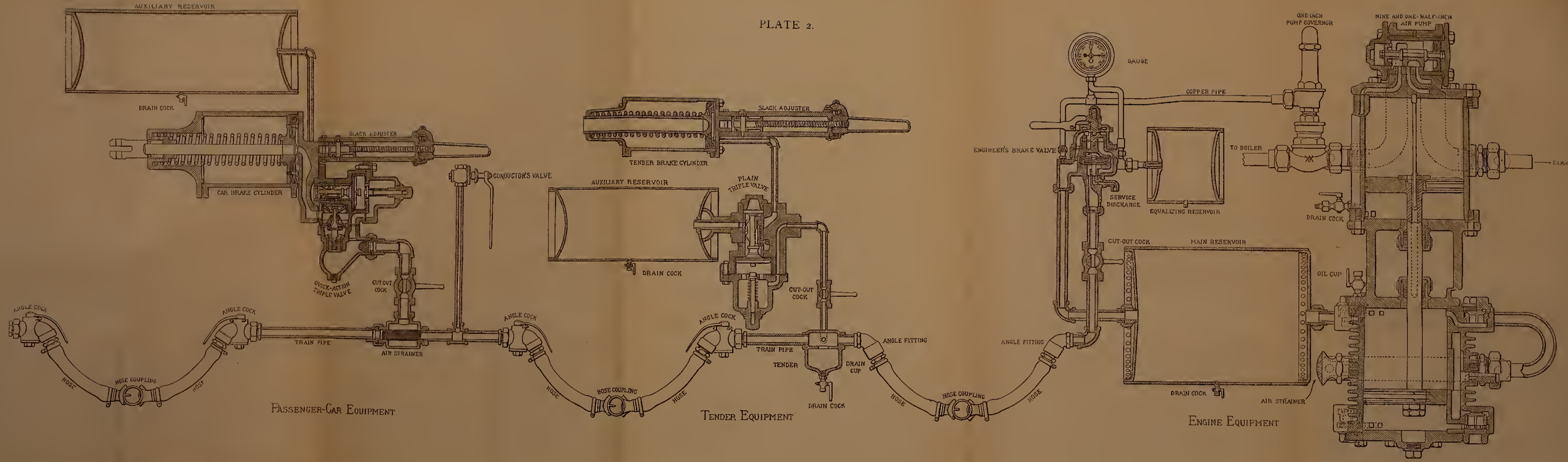
AUXILIARY RESERVOIR
DRAIN COCK
SLACK ADJUSTER
CAR BRAKE CYLINDER
CONDUCTOR'S VALVE
QUICK-ACTION TRIPLE VALVE
CUT-OUT COCK
ANGLE COCK
ANGLE COCK
TRAIN PIPE
AIR STRAINER
ANGLE COCK
HOSE
HOSE COUPLING
HOSE
HOSE
HOSE COUPLING
HOSE
PASSENGER-CAR EQUIPMENT
TENDER BRAKE CYLINDER
SLACK ADJUSTER
AUXILIARY RESERVOIR
PLAIN TRIPLE VALVE
DRAIN COCK
CUT-OUT COCK
ANGLE COCK
TRAIN PIPE
TENDER
DRAIN CUP
ANGLE FITTING
DRAIN COCK
HOSE
HOSE COUPLING
HOSE
TENDER EQUIPMENT
GAUGE
ONE-INCH PUMP GOVERNOR
NINE AND ONE-HALF-INCH AIR PUMP
COPPER PIPE
ENGINEER'S BRAKE VALVE
TO BOILER
EXHAUST
SERVICE DISCHARGE
EQUALIZING RESERVOIR
DRAIN COCK
CUT-OUT COCK
MAIN RESERVOIR
OIL CUP
ANGLE FITTING
DRAIN COCK
AIR STRAINER
ENGINE EQUIPMENT

Should a train break in two, the escape of the air in the trainpipe applies the brakes automatically to both sections. The brakes are also automatically applied through the bursting of a hose or pipe. In fact, *any material reduction of pressure in the trainpipe applies the brakes*, which is the characteristic feature of the Automatic Brake.

An angle cock is placed in the trainpipe at each end of every car, which must be closed before separating the couplings to prevent an application of the brakes. A stop cock is also placed in the cross-over pipe leading from the trainpipe to the quick-action triple valve, and also in the trainpipe near the engineer's brake valve, within convenient reach of the engineer. The former is for the purpose of cutting out, or rendering inoperative, the brake apparatus upon a car, if it should become disabled for any reason, and the latter is for cutting out the engineer's brake valve upon all locomotives except the first, in case two or more are attached to the same train.

PLATE 3.

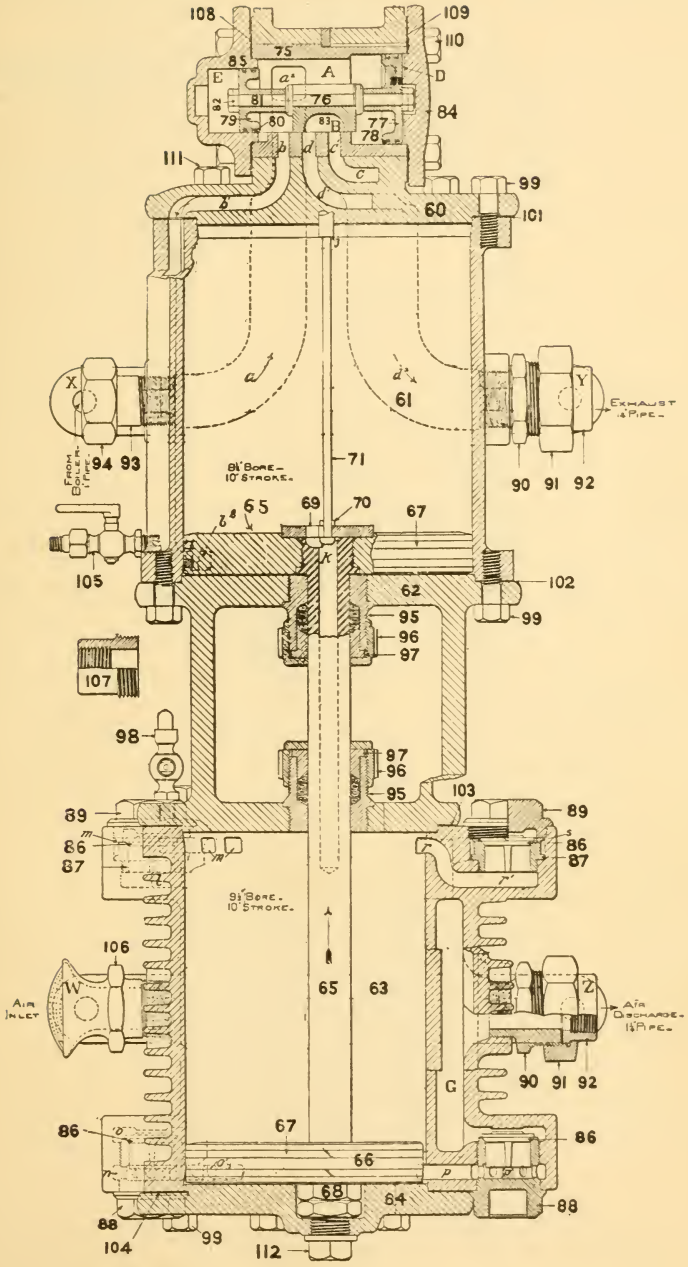

NINE AND ONE-HALF-INCH AIR PUMP.

PLATE 4.

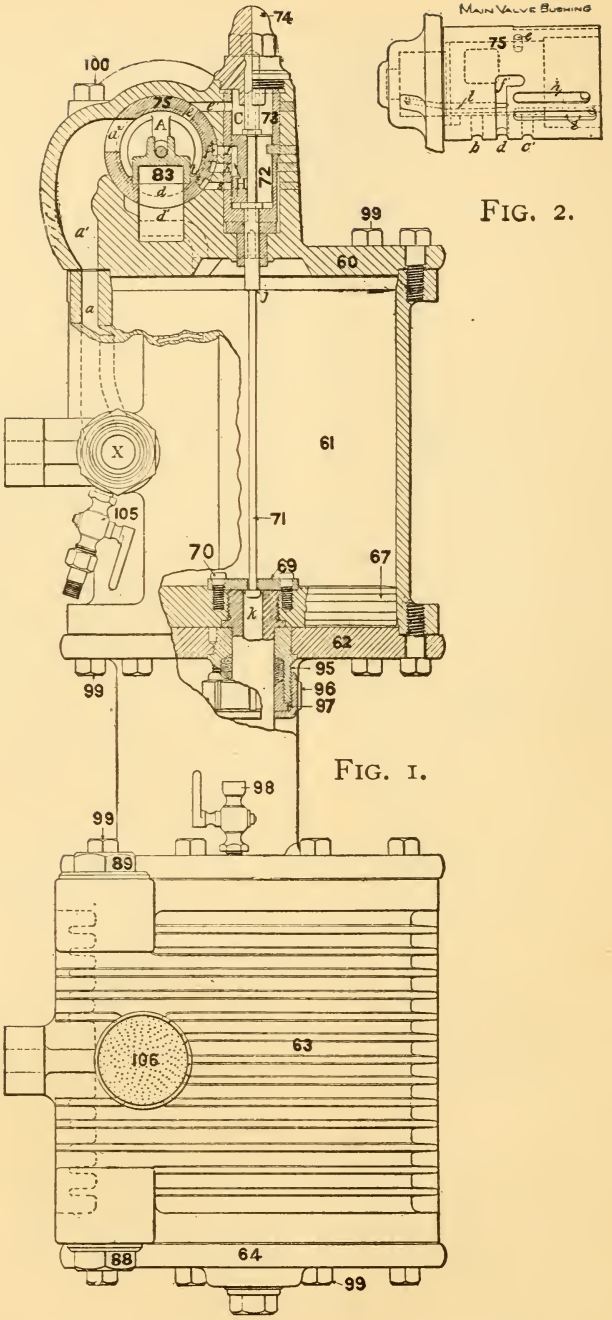

FIG. 2.

FIG. 1.

NINE AND ONE-HALF-INCH AIR PUMP.

The Nine and One-half-inch Air Pump.

The Nine and One-half-inch Air Pump is shown on Plates 3 and 4. The following description applies to either the right or left-hand pump, the only difference between the two being in the location of the steam and exhaust connections, for convenience of piping. All parts of the two pumps are interchangeable.

As will be seen by examining the Plates, the valve gear of the pump consists of pistons 77 and 79, of unequal diameter, connected by rod 76, which imparts the movement of the pistons to slide valve 83, and this valve in turn controls the steam supply which operates main steam piston 65. The reversal of the motion of pistons 77 and 79 is controlled by reversing slide valve 72, the duty of which is to admit and discharge steam to and from chamber D, at the right of piston 77.

Chambers A and C are always in free communication through port *e*, *e'*. The reversing valve is operated by rod 71, to which movement is imparted by reversing plate 69, which engages reversing button *k* on the downward stroke of the steam piston and shoulder *j* on the upward stroke.

Chamber E always communicates with the exhaust in order that no back pressure may occur when piston 79 is forced to the left, and that a partial vacuum shall not occur when the piston is drawn to the right. This exhaust connection is made by means of port *t*, shown in the main-valve bushing. This port leads from chamber E directly to main exhaust port *d*, so that chamber E, at the left of piston 79, is always free from steam pressure.

When reversing slide valve 72 is in the position shown, chamber D is connected, through ports h^1, *h*, reversing-valve cavity H, and ports *f* and f^1, with main exhaust passage *d*, d^1, d^2, and there is no pressure at the right of piston 77.

As steam enters the pump at X, it passes through passage a, a^1, a^2 into chamber A, between pistons 77 and 79. Since the area of piston 77 is greater than that of piston 79, it is forced to the right, drawing with it piston 79 and slide valve 83, to the position shown on Plate 3, thus admitting steam below piston 65, through port b, b^1, b^2. Piston 65 is thereby forced upward, and the steam above piston 65 passes through port c, c^1, cavity B of slide valve 83, port d, and passage d^1, d^2, to connection Y, at which point it leaves the pump and discharges into the atmosphere through the exhaust pipe.

When piston 65 reaches the upper end of its stroke, reversing plate 69 strikes shoulder j on rod 71, forcing it and reversing slide valve 72 upward sufficiently to expose port g. Steam from chamber C then enters chamber D through port g and port g^1 of the bushing (Plate 4). The pressures upon the two faces of piston 79 are thus equalized, and the piston is balanced. The pressure in chamber A, acting upon small piston 79, therefore forces it to the left, drawing with it piston 77 and slide valve 83.

With slide valve 83 in its extreme position at the left, steam from chamber A is admitted, through port c^1, c, above piston 65, forcing it down ; at the same time, the steam below the piston is discharged to the atmosphere through port b^2, b^1, b, chamber B of the slide valve, port d, d^1, d^2, and the exhaust pipe connected at Y.

When piston 65 reaches the lower end of its stroke, reversing plate 69 engages reversing button k, drawing it and reversing slide valve 72 down to the positions shown, and one double stroke of the steam end of the pump has been traced.

The movement of steam piston 65 is imparted to air piston 66 by means of the piston rod. As piston 66 is

raised, the air above it is compressed, and air from the atmosphere is drawn in beneath it ; the reverse is true in the downward stroke.

As piston 66 is raised, the air above it is compressed and passes through port *r*, *r'*, lifts discharge valve 86 from its seat, as soon as the pressure below the valve is greater than the main-reservoir pressure above it, passes down into chamber G, and thence into the main reservoir through the pipe connected at Z. The upward movement of the air piston produces a suction which causes lower left-hand receiving valve 86 to lift from its seat, and atmospheric air enters through strainer W, passes to chamber *n* below the receiving valve, thence past that valve into port *o*, and into the lower end of the air cylinder through *o'*, filling the cylinder. In the downward stroke of the pump, the effect just described is produced upon the opposite corresponding receiving and discharge valves.

The receiving and discharge valves of the 9½-inch pump should each have a lift of 3/32 of an inch.

Directions.

In starting a pump, always run it slowly until it becomes warm; by that time, there will be an air cushion in the air cylinder and the early steam condensation will have escaped through the drain cocks and the exhaust.

The lubricator should be in operation as soon as possible after starting.

A swab, well oiled, is essential on the piston rod. The amount of oil to be used in the steam cylinder of the pump depends considerably upon the amount of work performed : some pumps require more oil than others. Judgment should determine the amount, it being remembered

that a saving of ten cents' worth of oil may result in a dollar's worth of wear of the pump.

Engine oil should never be used in the air cylinder, as it eventually clogs and restricts the air passages, causing the pump to heat and producing bad results in general ; valve oil gives the best performance. The air cylinders of pumps in heavy service should receive a small amount of oil each trip, and continuous or regular oiling will give the best results.

It is an aid to good operation to run a hot solution of potash through the air cylinder three or four times a year. This should always be followed by considerable clean, hot water, and the union should be disconnected at the main reservoir to prevent the potash from working back into the brake system, where it would destroy gaskets.

The Eight-inch Air Pump.

Plate 5 shows the Eight-inch Air Pump in its upward stroke. 10 is the steam piston and rod ; 11, the air piston ; and piston valves 7, piston 23, reversing slide valve 16, reversing rod 17 and reversing plate 18 constitute the valve gear of the pump. Valves 30 and 32 are the discharge air valves, and 33 and 31 are the receiving air valves.

In service, the pump governor is attached at X and has a suitable pipe connection with the steam supply. Steam enters chamber *m*, and port *h*, always uniting chambers *m* and *e*, conducts steam from the former to the latter, which contains the reversing valve.

When reversing slide valve 16 is in the position shown, steam passes from chamber *m*, through port *h*, into chamber *e*, and thence through port *a* into chamber *d* above reversing piston 23. The same steam pressure now acts downward upon piston 23 and lower piston valve 7, and upward on upper piston valve 7 ; but, as the combined areas of piston 23 and lower piston valve 7 are greater than that of upper piston valve 7, the steam forces piston 23 and piston valves 7 downward to the position shown. Steam is admitted to the cylinder through the upper ports in bushing 26, raising piston 10, while the steam above piston 10 passes through the upper ports in bushing 25, thence through port *f*, *f*, shown by dotted lines, into chamber *g*, and out at Y, through a suitable pipe, to the smoke arch, where it is discharged to the atmosphere.

When piston 10 has nearly completed its upward stroke, reversing plate 18 engages shoulder *n* and raises reversing slide valve 16 to its uppermost position, in which port *a* is closed and, as the cavity in the valve connects ports *b* and *c*, the steam above piston 23 is

PLATE 5.

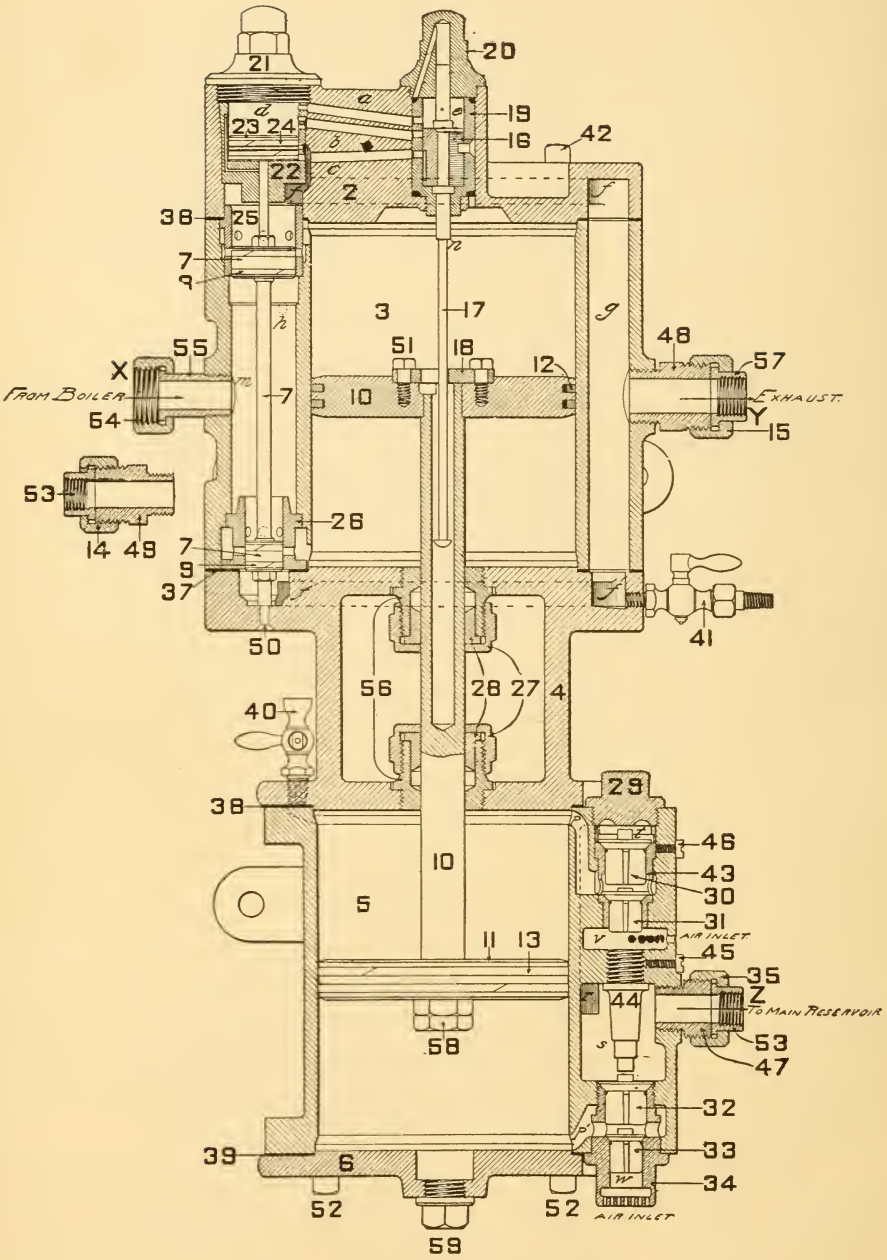

EIGHT-INCH AIR PUMP.

discharged through port *b*, the cavity in reversing slide valve 16, port *c*, and port *f*, *f* into chamber *g*, and thence to the atmosphere through the exhaust pipe at Y.

There being now no pressure in chamber *d* to act downward upon piston 23, the upward force upon large piston valve 7 overbalances the downward force upon smaller piston valve 7 and both are raised so as to close the upper ports and uncover the lower ports in both bushings 25 and 26. Steam from chamber *m* is admitted through the lower ports of bushing 25 into the chamber above piston 10, forcing it down, and the steam below the piston is discharged through the lower ports in bushing 26 and the passage *f'*, *f'* into chamber *g*, and out through the exhaust pipe at Y.

When piston 10 has nearly completed its downward stroke, the lower face of reversing plate 18 engages the button at the end of reversing rod 17, drawing the reversing slide valve down to the position shown, and the motion of the pump is again reversed.

During the upward stroke of the pump, the air above piston 11 is compressed and discharged through port P into the space between receiving valve 31 and discharge valve 30, forcing the latter from its seat and flowing through chamber *t* and port *r* into chamber *s*, and out at Z to the main reservoir. The main-reservoir pressure in chamber *s* holds lower discharge valve 32 upon its seat during the upward stroke of the pump, and the tendency toward a vacuum below piston 11 allows receiving valve 33 to be forced from its seat by atmospheric pressure, which then enters into the lower part of the air cylinder. In the downward stroke of the pump, the conditions are reversed: receiving valve 31 is lifted to fill the chamber above piston 11 as it descends, and the air compressed below the piston

forces discharge valve 32 from its seat and flows through chamber *s* and the pipe connected at Z to the main reservoir.

The receiving valves should have a lift of 1/8 of an inch, and the discharge valves, 3/32 of an inch.

Recommendations concerning the care of the Nine and One-half-inch Pump apply also to the Eight-inch Pump.

The Air-Pump Governor.

The location of the Air-Pump Governor (Plate 6) in the brake system is illustrated on Plate 2.

The purpose of the governor is to cut off the steam supply, and thus practically stop the pump, when the desired air pressure has been attained. The air pressure connection to the governor is at W. The adjustment of the governor is accomplished by means of adjusting nut 40, which regulates the tension of spring 41 upon diaphragm 42. While the tension of spring 41 is more than sufficient to withstand the air pressure in chamber *a* upon the diaphragm, it holds the small pin valve upon its seat; but, when the air pressure upon diaphragm 42 becomes greater than the tension of spring 41, the diaphragm is thereby raised, unseating the small pin valve. Air from chamber *a* then flows into the chamber above piston 28 and forces it down, thereby seating steam valve 26 and cutting off the steam supply to the pump.

Whenever the air pressure becomes reduced, by leakage or otherwise, spring 41 forces diaphragm 42 down and the pin valve is again seated: the air in the chamber above piston 28 then escapes to the atmosphere through the small relief port *c*, and spring 31, assisted by the steam pressure below valve 26, raises piston 28 to its normal position, shown in the cut, and the pump resumes operation.

During the time that the pin valve is unseated, there is a continuous escape of air to the atmosphere through relief port *c*. This leakage, in conjunction with the leakage of steam through a small port (indicated by dotted lines) through steam valve 26, serves to keep the pump slowly operating to avoid trouble from steam condensation that might otherwise accumulate.

PLATE 6.

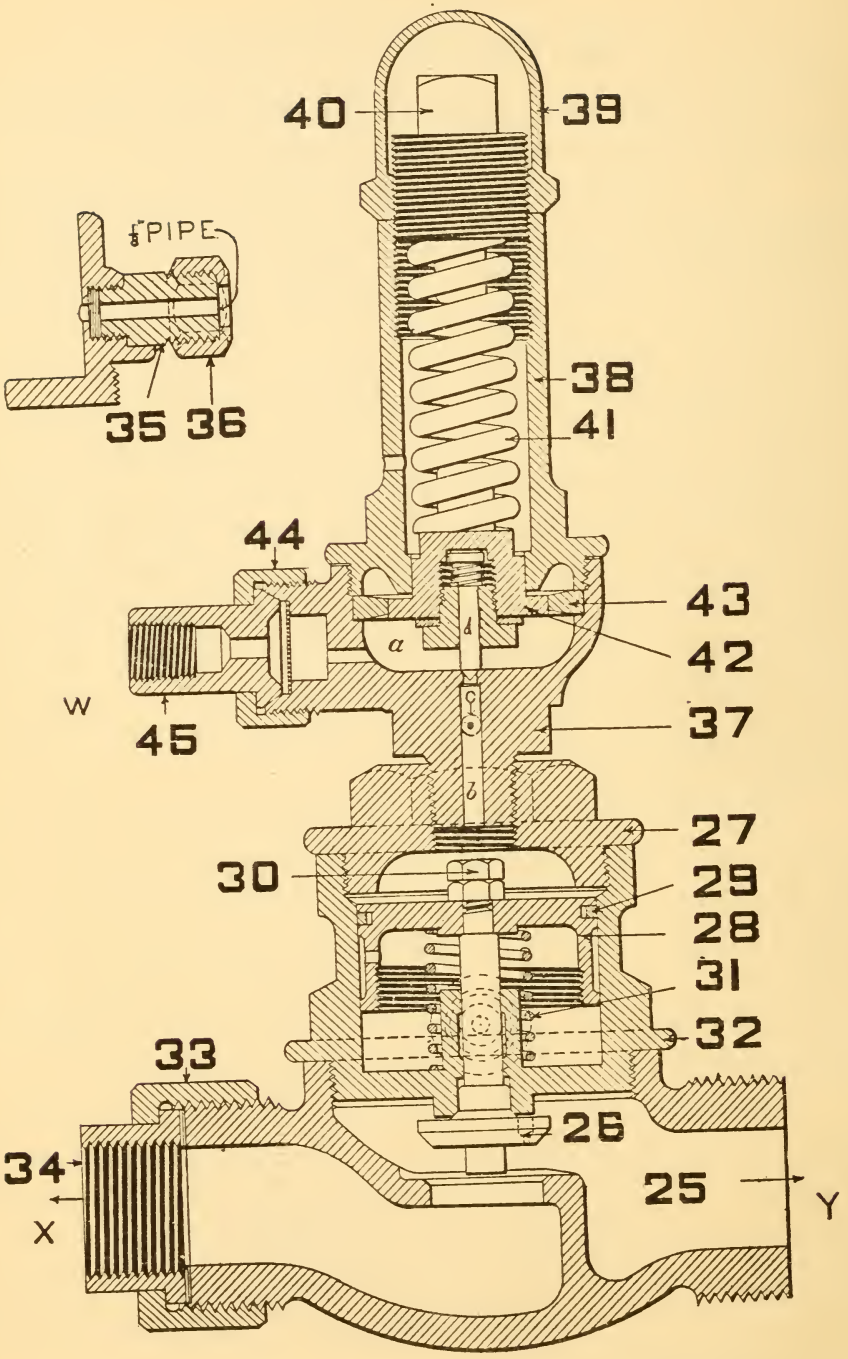

PUMP GOVERNOR.

35 is a drip-pipe connection to the chamber immediately below piston 28. Its purpose is to permit any steam that may leak past the stem of valve 26, or any air that may leak past piston 28, to escape to the atmosphere. To avoid freezing, the connecting drip pipe should be made as short as the accomplishment of its purpose will permit.

The description of the operation of this governor applies also to that of the double, or "Siamese," Governor used with the High-Speed and High-Pressure Control Equipments, which has two diaphragm portions of the governor connected to one steam-valve cylinder ; but only one diaphragm is at any one time operative upon the lower portion of the governor.

The Main Reservoir.

The principal object of the Main Reservoir is to store an abundant air supply for the purpose of releasing and quickly recharging the brakes; but it also serves to entrap any dirt and water suspended in the compressed air, and to thereby prevent their being conveyed into the brake system.

The Main Reservoir should have a capacity of not less than 20,000 cubic inches (and often more) upon passenger engines, and not less than 40,000 cubic inches on freight engines—50,000 is better. The use of a large reservoir in freight service is of great benefit to the air pump, as it permits a sufficient volume of air to be compressed, while the brakes are applied, to release the brakes and recharge the auxiliary reservoirs without running the pump at a high rate of speed for that purpose, which would entail liability of its overheating.

If possible, the location of the Main Reservoir should always be such that the dirt, oil, and moisture in the compressed air will drain into it ; but location is a consideration subordinate to that of sufficient capacity. In order to secure sufficient capacity, it is necessary, in some cases, to locate the Main Reservoir at the back of the tender : this practice necessitates two additional lines of hose between the engine and tender, which form pockets in which water precipitated from the compressed air may collect, and in winter freeze, and where oil may accumulate and rapidly deteriorate the hose. The plan is also generally expensive. The best location for the Main Reservoir is back of the cylinder saddle, between the frames, or under the runningboards: it is often found necessary to locate them under the cab footboards.

The use of two Main Reservoirs is very advantageous, in providing superior facilities for the condensation and

precipitation of moisture and the deposit of oil and other foreign matter. The compressed air from the pump should be delivered into one and piped to the brake valve from the other, the two being connected by suitable piping. The points at which the air enters and leaves each reservoir should be as far separated as possible.

Main Reservoirs should always be drained after each trip, the drain cock being left open during the interval between trips, in order to completely remove oil and water from the space provided for storing air. A reservoir partly filled with water is correspondingly reduced in capacity, which is apt to be accompanied by defective release and slow recharging of the brakes and by a hot pump; and the water is likely to work back and accumulate in hose and sags in the trainpipe, as well as in the triple valves, where it may freeze and cause serious trouble in winter.

The "G-6" Engineer's Brake Valve.

The "D-5," "E-6" and "F-6" Brake Valves are practically identical; the different letters and figures simply refer to the same valve, as illustrated in different Catalogues. The "G-6" Valve is also the same, except that the Slide-Valve Feed Valve supplants the former Feed-Valve Attachment.

Before describing the operation of the Brake Valve, it is advantageous to explain a few commonly used terms, which are as follows:

EXCESS PRESSURE—The difference between the pressure in the main reservoir and that in the trainpipe; this, when the train brake apparatus is fully charged, is usually from 20 to 30 pounds. Excess pressure combines with abundant main-reservoir capacity to insure prompt release and recharging. The amount of excess pressure to be carried is determined by the character of the road, length of train, size of main reservoir, and kindred considerations.

SERVICE APPLICATION—A gradual application of the brakes, such as is usual in slowing up or in a station stop: a gradual reduction of trainpipe pressure produces this effect.

EMERGENCY APPLICATION—Is one in which the full braking power is applied almost instantaneously, for the purpose of avoiding a wreck, saving lives, etc.: a sudden reduction of trainpipe pressure produces this effect.

The red-hand gauge connection is piped to R (Plates 7 and 8), and indicates main-reservoir pressure. A tee is usually inserted in this pipe for a pipe connection to the pump governor, which is generally adjusted to cut off the steam supply when main-reservoir pressure has reached 90 pounds. The black-hand gauge connection is piped to W and is directly connected to the equalizing reservoir; but, as

will presently be explained, the black hand also indicates trainpipe pressure. The black hand is usually referred to as the trainpipe-pressure hand, and the red, as the main-reservoir-pressure hand.

The customary standard trainpipe pressure is 70 pounds, while 90 pounds is quite general as a standard main-reservoir pressure ; but these pressures may be modified to meet special conditions. In this book, 70 pounds will be considered the standard trainpipe, and 90 pounds, the standard main-reservoir pressure ; but it should be understood that, in special cases, it is proper to modify this practice.

There are five different positions of the Brake Valve handle; namely, Release, Running, Lap. Service Application and Emergency Application Positions. As the engineer faces the valve, the position farthest to his left is Release, and the other positions follow to the right in the order named.

RELEASE POSITION—The purpose of this position is to provide a large and direct passage from the main reservoir to the trainpipe, to permit a rapid flow of air into the latter, to insure a quick release and recharging of the brakes. Release is the position shown on Plates 7 and 8. Referring to Plate 2, it will be seen that a pipe leads from the main reservoir to the Brake Valve. It is connected at X (Plate 7), and, when the Brake Valve is in Release Position, main-reservoir air flows through passage A, A to the chamber above rotary valve 14, thence through port *a* in that valve, cavity *b* in its seat 3, cavity *c* in the valve (which overlaps cavity *b*) and passage *l*, *l*^{r} to the trainpipe at Y. Port *g*, being then also exposed to cavity *c*, simultaneously conducts air into chamber D above equalizing piston 18. Chamber D is, by means of passage S, S

and a pipe connected at T, always in open communication with the equalizing reservoir, shown on Plate 2. Port *j* of the rotary valve registers with port *e* in its seat, and air is also conducted through these ports to chamber D. It thus occurs that, in Release Position, two small ports feed the equalizing reservoir and one large one supplies the trainpipe.

The purpose of the equalizing reservoir is to increase the volume of chamber D above piston 18. Without this reservoir, the volume would be so small that a desired reduction of pressure could be made only with difficulty, and the equalizing piston could not be depended upon to operate in a manner to cause the proper action of the brakes.

While the handle of the Brake Valve is in Release Position, "warning port" *r* (shown in dotted lines), of very small area, discharges main-reservoir pressure to the atmosphere with considerable noise, attracting the engineer's attention if he subsequently neglect to move the valve handle to Running Position. If the Brake Valve were allowed to remain in Release Position, a pressure of 90 pounds would result, not only in the main reservoir, but also in the equalizing reservoir, trainpipe, and auxiliary reservoirs, since, in this position, they are all in direct communication. To stop the escape of air through the "warning port" and to prevent overcharging the brake system, the valve handle is moved to Running Position.

RUNNING POSITION—This is the proper position of the Brake Valve when when the brake apparatus is charged and ready for an application. In this position (shown on Plate 9), the main-reservoir pressure attains the proper excess above that in the trainpipe. Main-reservoir air, which is always present in the chamber above rotary valve 14, is conducted by port *j* in that valve and passages *f* and *f'* into chamber F (Plate 8); thence, as hereafter explained,

PLATE 7.

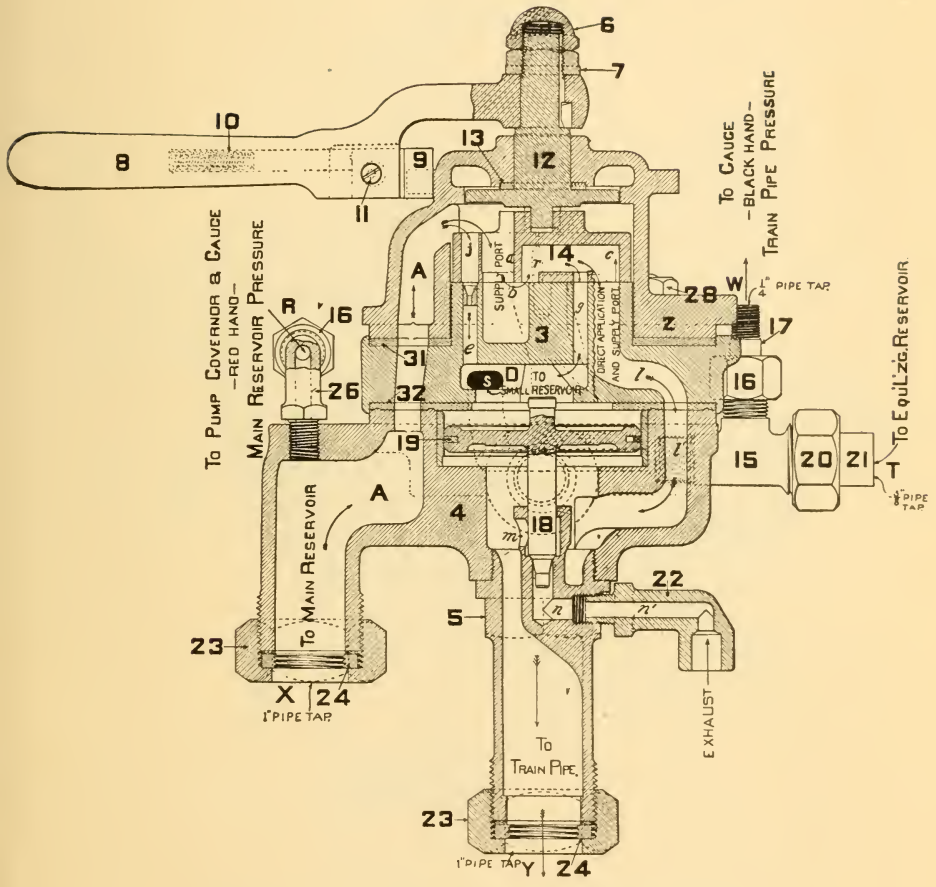

"G-6" ENGINEER'S BRAKE VALVE.

PLATE 8.

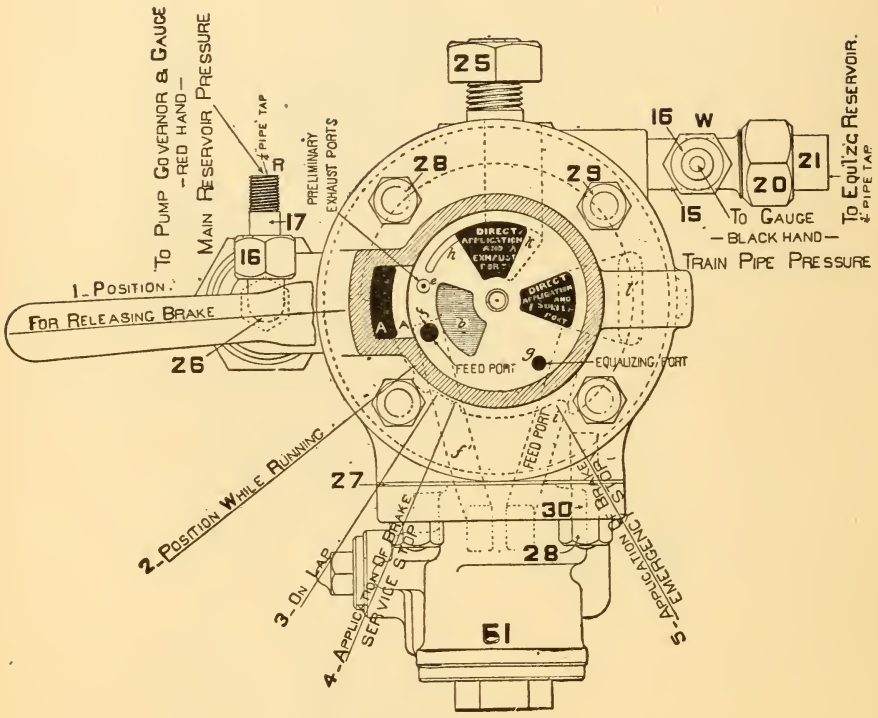

"G-6" ENGINEER'S BRAKE VALVE.

PLATE 9.

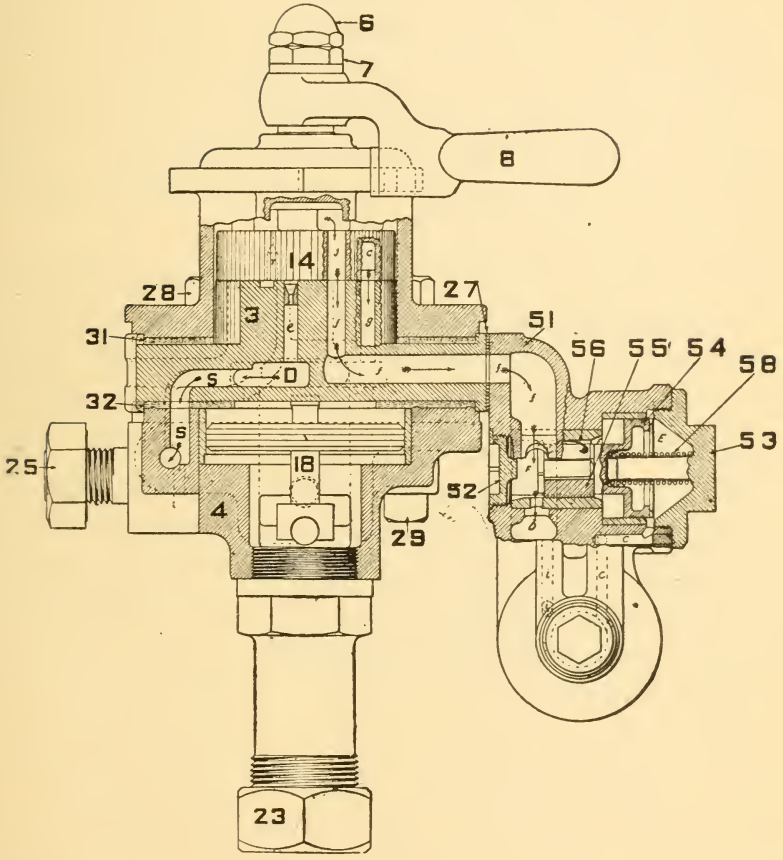

"G-6" ENGINEER'S BRAKE VALVE.

its course is through the Feed Valve, from which it is conducted by passages *i*, *l* and l^r (Plate 7) into the trainpipe at Y. Port *g* still connects chamber D with cavity *c* of the rotary valve, and, as cavity *c* still overlaps passage *l*, the equalizing reservoir and trainpipe are directly connected; the same pressure consequently exists above and below equalizing piston 18. The Feed Valve is adjusted to cut off the air supply to the trainpipe when the pressure reaches 70 pounds, so that charging then ceases, though the pump governor will not stop the pump until main-reservoir pressure has reached 90 pounds.

The operation of the Feed Valve is described hereafter.

LAP POSITION—This position, the second from Release, is that in which all ports are operatively blanked. After the preliminary discharge of air for a service application of the brakes, the valve handle is placed in this position until it is desired to make a futher trainpipe reduction or to release the brakes. If the pump be started with the Brake Valve "on lap," the result will be a pressure of 90 pounds in the main reservoir and no pressure in the trainpipe, when the pump is stopped by the Governor.

SERVICE APPLICATION POSITION—This position is the third from Release, and is used to cause the service application, as already described. A groove in the lower face of rotary valve 14 connects port *e* with groove *h* in its seat, causing air to be discharged from chamber D and the equalizing reservoir, through port *k*, into the atmosphere, thus reducing the pressure *above* piston 18. The greater pressure in the trainpipe *below* the piston thereupon forces it upward and unseats the attached discharge valve, and trainpipe air discharges, through port *m* and passages *n* and n^r of exhaust fitting 22, into the atmosphere. The desired reduction of pressure in chamber D having been secured,

the handle of the valve is moved back to Lap Position. It is to be observed, however, that, after the handle of the valve has been moved to this position, air *will continue to discharge* from exhaust fitting 22, until the pressure in the trainpipe has been reduced to a trifle less than that in chamber D and the connected equalizing reservoir; then piston 18 automatically forces the discharge valve to its seat, through the action of the greater pressure upon its upper surface. Ordinarily, a reduction of from 5 to 8 pounds in trainpipe pressure is sufficient for an initial application of the brakes.

EMERGENCY APPLICATION POSITION—This position, which is the farthest from Release, is used for an emergency application of the brakes. "Direct-application-and-exhaust-port" *k* and "direct-application-and-supply-port" *l* (Plate 8) are directly connected by means of large cavity *c* in rotary valve 14, which, in this position, overlaps both, thus permitting a very rapid discharge of trainpipe air through large ports. The resulting sudden reduction of trainpipe pressure causes the nearly instantaneous application of the brakes throughout the train, as already described.

The Slide-Valve Feed Valve.

Plates 10 and 11 illustrate the device known as the Slide-Valve Feed Valve, which may be used with either the "D-5," "E-6," "F-6" or "G-6" Brake Valve, to maintain a predetermined trainpipe pressure while the brake-valve handle is in Running Position.

Plate 10 is a central section through the supply-valve case and governing device, and Plate 11 is a central section through the regulating valve and spring box and a transverse section through the supply-valve case.

Ports f' and i register with ports in the Brake Valve, designated by similar letters on Plate 8, and, in Running Position, main-reservoir pressure constantly has free access, through passages f' and f, to chamber F. Chamber E, which is separated from chamber F by supply-valve piston 54, is connected with passage i, and thus with the trainpipe, through passage c, c, port a (controlled by regulating valve 59) and chamber G, under diaphragm 57. Regulating valve 59 is normally held open by diaphragm 57 and regulating spring 67, the tension of which is adjusted by regulating nut 65. When so open, chamber E is in communication with the trainpipe and is subject to trainpipe pressure.

When the handle of the Engineer's Brake Valve is placed in Running Position, air pressure from the main-reservoir in chamber F forces supply-valve piston 54 forward, compressing its spring 58, carrying supply valve 55 with it and uncovering port b, and thereby gains entrance directly into the trainpipe through passage i, i. The resulting increase of pressure in the trainpipe (and so in chamber G under diaphragm 57) continues until it becomes sufficient to overcome the tension of regulating spring 67, previously adjusted to yield at 70 pounds. Diaphragm 57 then yields and allows

PLATE 10.

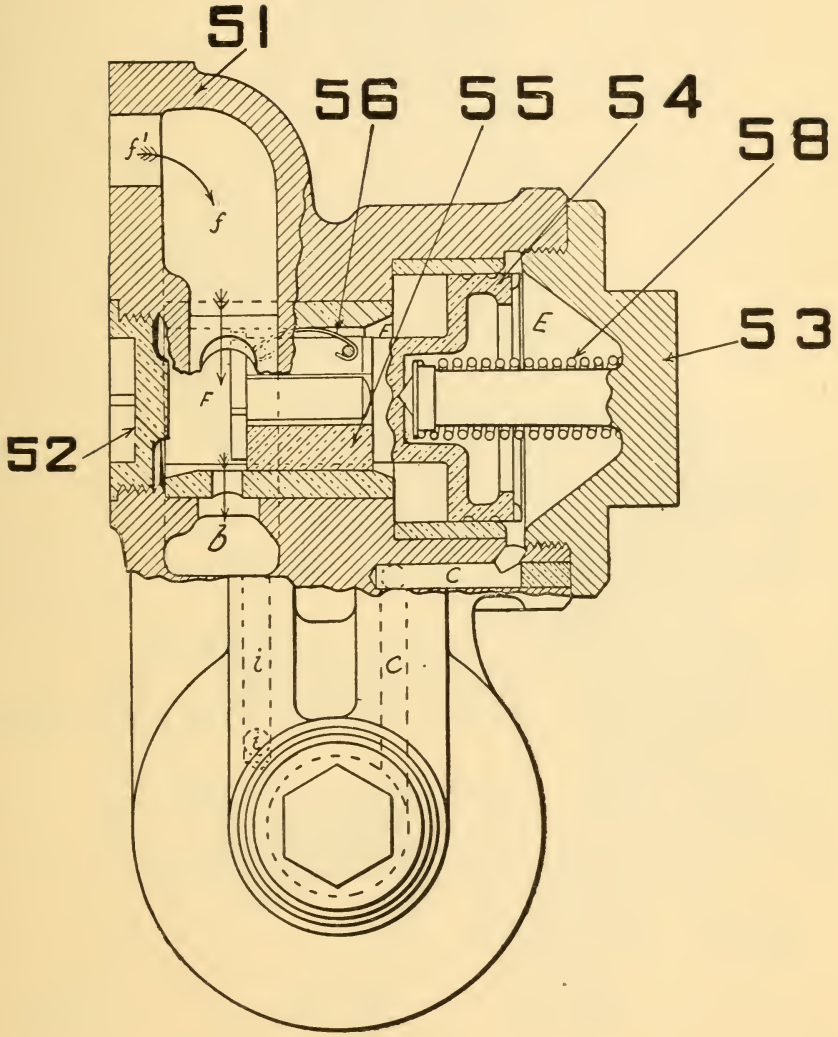

SLIDE-VALVE FEED VALVE.

PLATE 11.

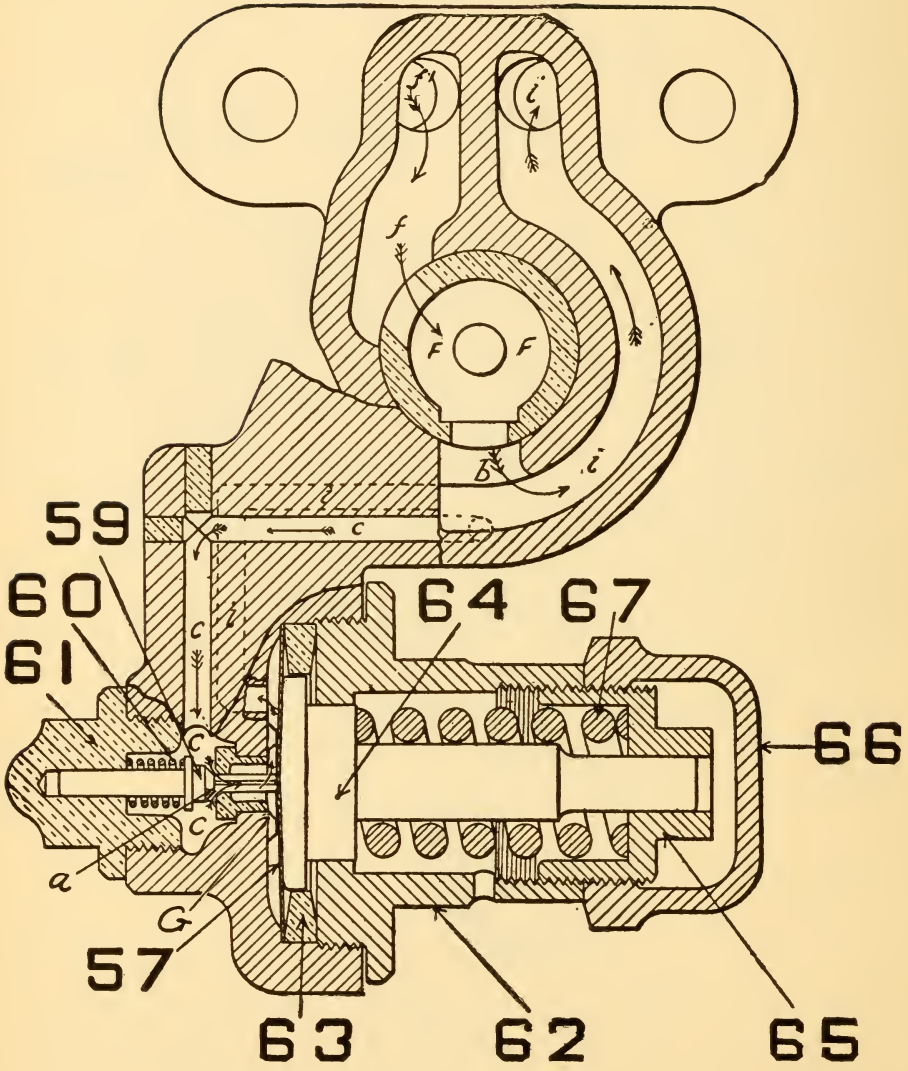

SLIDE-VALVE FEED VALVE.

regulating valve 59 to be seated by spring 60, closing port *a* and cutting off all communication between chamber E and the trainpipe. The pressures in chambers F and E then become equalized, through leakage past supply-valve piston 54, and supply-valve-piston spring 58, previously compressed by the relatively high pressure in chamber F, now reacts and forces supply valve 55 to its normal position, closing port *b* and cutting off communication between the main reservoir and the trainpipe. A subsequent reduction of trainpipe pressure reduces the pressure in chamber G and permits regulating spring 67 to force regulating valve 59 from its seat, thereby causing the accumulated pressure in chamber E to discharge into the trainpipe. The equilibrium of pressure upon the opposite faces of supply-valve piston 54 being thus destroyed, the higher main-reservoir pressure in chamber F again forces it, with supply valve 55, forward and recharges the trainpipe through port *b*, as before.

PLATE 12.

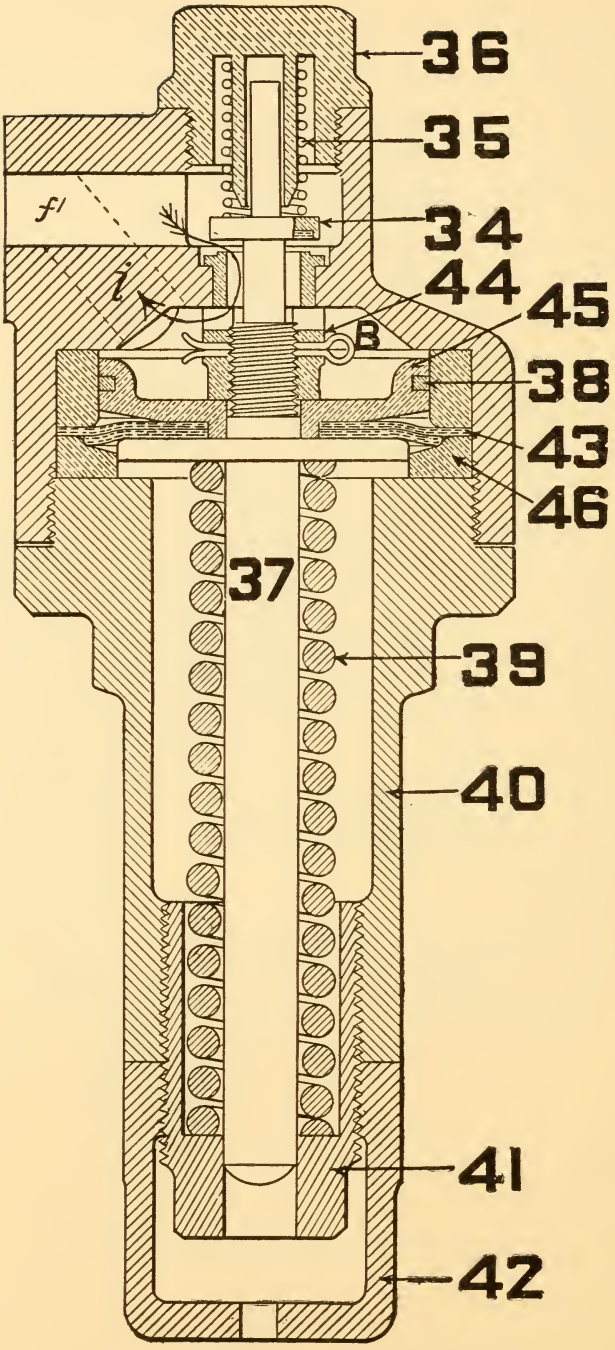

OLD-STYLE FEED VALVE.

The Old-Style Feed Valve.

The accompanying cut (Plate 12) illustrates what is now usually known as the Old-Style Feed Valve. It was used with the "D-5," "E-6" and "F-6" Brake Valves to maintain a pressure of 70 pounds in the trainpipe when the brake valve was in Running Position.

When connected to the brake valve, passage f' registers with passage f' of the brake valve (Plate 8), and passage i registers with passage i of the brake valve, which passage is connected with the trainpipe by means of passage l, l' (Plate 7), into which it leads.

Piston 45 of the Feed Valve is subject to the upward pressure of regulating spring 39 and to the downward air pressure in chamber B above the piston. The tension of spring 39 is so adjusted, by regulating nut 41, that a pressure of 70 pounds (or other desired trainpipe pressure) is necessary in chamber B to overcome it and force the piston down. An upward movement of the piston unseats supply valve 34 and a downward movement permits spring 35 to seat it. Chamber B always contains the same pressure as that which exists in the trainpipe, being in open communication therewith.

When the brake valve is in Running Position and the pressure in chamber B is less than 70 pounds, regulating spring 39 will raise piston 45 and unseat supply valve 34. Air from the main reservoir, coming through passage f, f' of the brake valve, enters the Feed Valve passage f', passes supply valve 34 into chamber B, and thence discharges, through passage i and the corresponding passage i in the brake valve, into the trainpipe. When the pressure in the trainpipe and chamber B becomes 70 pounds, it overcomes the tension of regulating spring 39 and forces piston 45 downward, allowing spring 35 to seat supply valve 34. No

further movement of air can take place through the Feed Valve until the pressure in chamber B and the trainpipe becomes, by leakage or otherwise, so reduced that the regulating spring can again force the piston upward and unseat the supply valve.

The "D-8" Engineer's Brake Valve.

What has been said concerning the "G-6" Brake Valve, defining such terms as Excess Pressure, Service Application, Emergency Application and the usual trainpipe and main-reservoir pressures, as well as the description relating to the different positions of the brake-valve handle, applies also to the "D-8" Brake Valve.

Plates 13 and 15 are sectional views of the Brake Valve in the Release Position; Plate 14 is a plan view of the rotary-valve seat, and Plate 16 illustrates the rotary valve and seat in perspective.

A pipe connected at R (Plates 13 and 14) leads to the red-hand connection of the air gauge; a pipe from W leads to the black-hand connection ; the pipe secured at T leads to the equalizing reservoir (Plate 2), and the pipe from V connects the trainpipe with the pump governor. The trainpipe is connected at Y and air from the main-reservoir enters the Brake Valve at X and always has access to the chamber above rotary valve 13 ; its further course depends upon the position of the rotary ralve.

Release Position—In the Release Position of the Brake Valve, main-reservoir air is conducted to the trainpipe at Y by supply port *a* in rotary valve 13, cavity *b* in its seat, cavity *c* (which overlaps both cavity *b* and passage *l* in this position) and passage *l*. Port *j* of the rotary valve registers with port *e* in the valve seat, so that chamber D, above equalizing piston 17, and the equalizing reservoir (connected therewith through port S and the pipe secured at T) are in direct communication with the main reservoir. Equalizing port *g* (shown by dotted lines on Plate 15) is in communication with cavity *c* of the rotary valve, so that chamber D is also fed through this port.

PLATE 13.

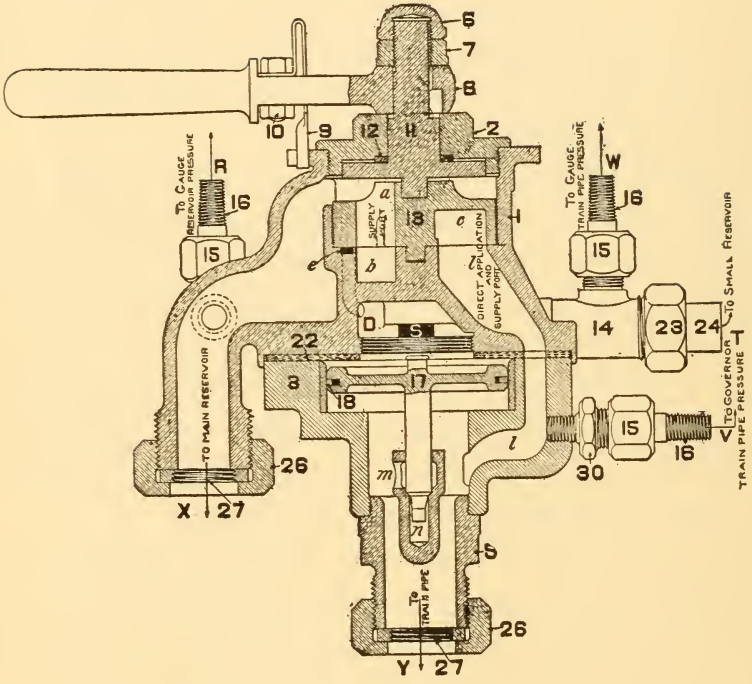

"D-8" ENGINEER'S BRAKE VALVE.

PLATE 14.

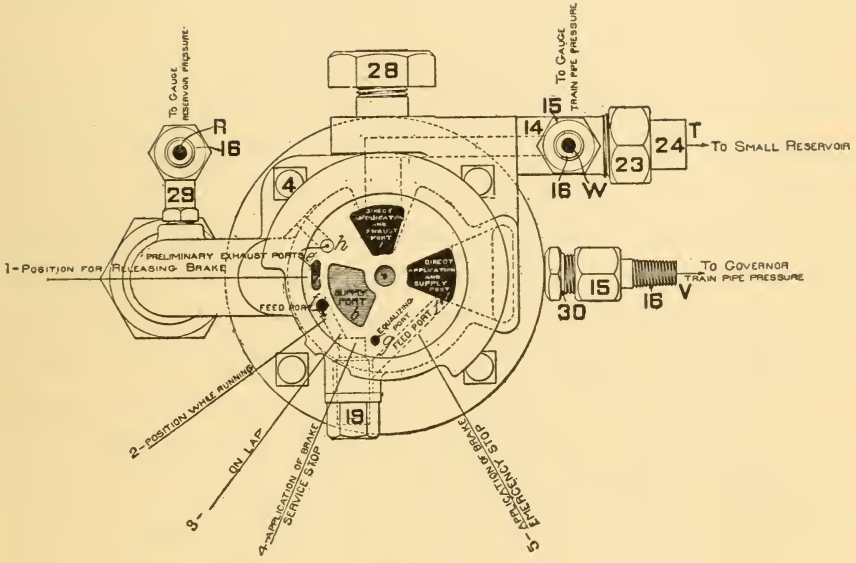

"D-8" ENGINEER'S BRAKE VALVE.

If the brake-valve handle were allowed to remain in Release Position, a pressure of 70 pounds would exist in the main reservoir and throughout the brake system when steam is finally cut off from the pump by its governor. This occurs because the pump governor is piped to the trainpipe and is therefore adjusted to cut off the steam supply as soon as the full trainpipe pressure of 70 pounds has been secured. To obtain excess pressure in the main reservoir, the brake-valve handle must therefore be moved into Running Position.

RUNNING POSITION—In this Position, port *j* of the rotary valve registers with passage *f* leading to excess-pressure valve 21, held to its seat by excess-pressure spring 20, the tension of which is equal to a pressure of 20 pounds per square inch. Air from the main-reservoir flows through port *j* into passage *f*, where it encounters the excess-pressure valve, forced toward its seat by trainpipe pressure and spring 20. When the pressure in passage *f* exceeds that in the trainpipe by more than 20 pounds, the excess-pressure valve is thereby forced from its seat, compressing spring 20, and the air flows through passages f^1 and *l* into the trainpipe, as shown on Plate 13. Port *g*, leading through the rotary-valve seat to chamber D, still communicates with cavity *c*, which also overlaps passage *l*, causing equalization of pressure in the trainpipe and chamber D—the latter being connected with the equalizing reservoir, as already explained. With the brake-valve handle in Running Position, the pump governor will cut off the steam supply when trainpipe pressure has become 70 pounds; but the interposition of the excess-pressure valve has caused a pressure, 20 pounds in excess of that in the trainpipe, to accumulate in the main reservoir, so that the main-reservoir pressure is 90 pounds.

LAP POSITION—When the rotary valve is in the Lap Position, all ports are operatively blanked. If the pump be started with the valve in this position, no air can reach the trainpipe to operate the pump governor, and the pump will not stop until the main-reservoir pressure has become about equal to the steam pressure in the boiler.

SERVICE APPLICATION POSITION—In this position, communication between the main reservoir and the trainpipe, and between the trainpipe and chamber D, is cut off, and cavity *p* in the lower face of the rotary valve connects port *e* with the small preliminary exhaust port *h*, whereby air is discharged from chamber D into the atmosphere. The resulting reduced pressure in chamber D and the equalizing reservoir permits the greater trainpipe pressure below equalizing piston 17 to raise it, unseating the trainpipe discharge valve ; trainpipe air thereupon discharges through passage *n* into the atmosphere, until the pressure becomes a trifle less than that remaining in chamber D, when the piston is forced downward and reseats the valve.

EMERGENCY APPLICATION POSITION—In this position, cavity *c* of rotary valve 13 overlaps both the large "direct-application-and-supply-port" *l* and "direct-application-and-exhaust-port" *k ;* a large, direct avenue is thus provided for quickly discharging trainpipe air into the atmosphere, and the resulting sudden reduction of trainpipe pressure causes an emergency application of the brakes.

Port *e* is slotted to the right ; this slot is provided in order that there may be no position between Release and Running Positions in which communication between the main-reservoir and the trainpipe is wholly cut off. If the rotary valve be so moved that port *j* is above the space between ports *e* and *f*, main-reservoir air can still feed through the slotted port into chamber D, thence through port *g* into

PLATE 15.

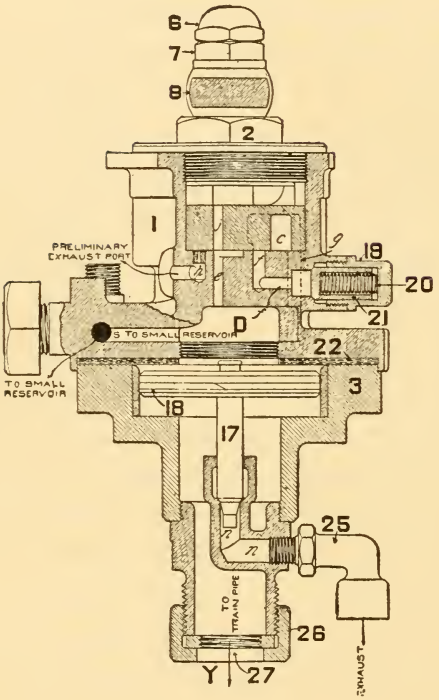

"D-8" ENGINEER'S BRAKE VALVE.

PLATE 16.

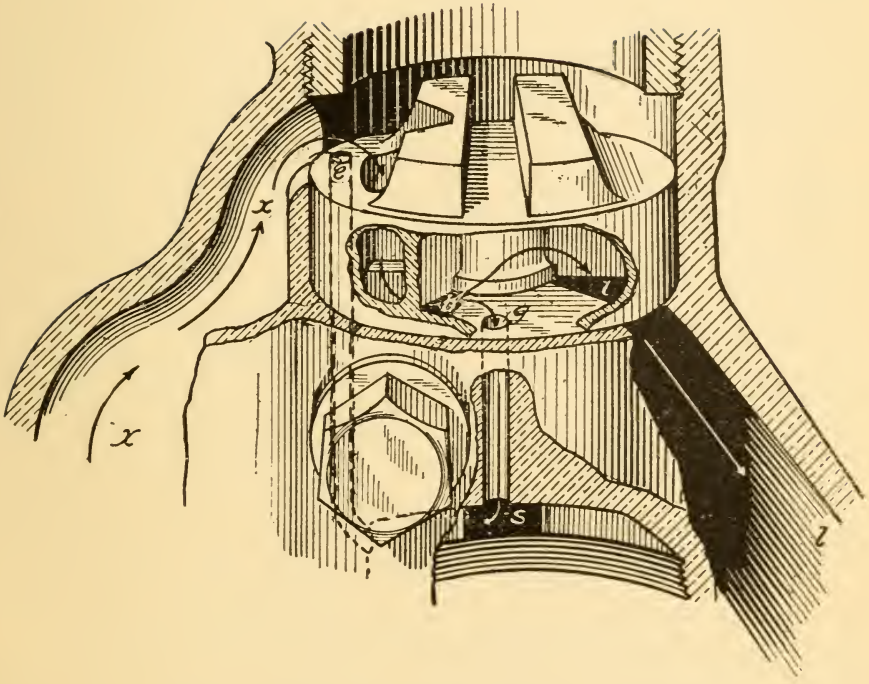

"D-8" ENGINEER'S BRAKE VALVE.

RELEASE POSITION.

cavity *c* of the rotary valve and through passage *l* into the trainpipe at Y. Port *e* also serves to allow main-reservoir pressure to reach chamber D above the equalizing piston when the valve handle is being moved to Release Position ; this connection is established as soon as port *j* in the rotary-valve comes into register with slotted port *e* in the rotary-valve seat.

The Quick-Action Triple Valve.

The Quick-Action Triple Valve is located in the brake system as shown on Plate 2.

This valve receives its name from the three distinct operations it performs in response to variations of train-pipe and auxiliary-reservoir pressures : it (1) charges the auxiliary reservoir, and (2) applies and (3) releases the brakes. The various positions of the working parts of the triple valve, in accomplishing these results, are illustrated in Figs. 1, 2, 3 and 4, Plate 17, while Fig. 5 is a perspective view of the slide valve and its seat.

The various parts of the triple valve, as shown on Plate 17, are 2, triple-valve body ; 3, slide valve ; 4, main piston ; 5, piston packing ring ; 6, slide-valve spring ; 7, graduating valve ; 8, emergency piston ; 9, emergency-valve seat ; 10, emergency valve ; 11, emergency-valve rubber seat ; 12, check-valve spring ; 13, check-valve case ; 14, check-valve-case gasket ; 15, check valve ; 16, strainer ; 19, cylinder cap ; 20, graduating-stem nut; 21, graduating stem; 22, graduating spring; 23, cylinder-cap gasket; 28, emergency-valve nut; and *i* and *k*, the feed grooves.

Strainer 16 is designed to exclude foreign matter from the triple valve. Piston 4 operates, in response to variations of trainpipe and auxiliary-reservoir pressures, to open and close feed groove *i*, and controls the movements of the slide valve and the graduating valve. The latter is secured to the piston stem by a pin, shown in dotted lines.

The graduating valve, moved by the main piston, controls the flow of air from the auxiliary-reservoir through service ports ports *W* and *Z* of the slide valve.

The slide valve, moved by the main piston, controls communication between the brake cylinder and the atmos-

phere, between the auxiliary reservoir and the brake cylinder, and also between the auxiliary reservoir and the chamber above emergency piston 8.

Charging.

Air from the trainpipe enters the triple valve at A (Fig. 1) and flows through passages *e*, *f*, *g* and *h*, past the main piston through feed grooves *i* in the bushing and *k* in the piston seat, and thence through chamber *m* to the auxiliary reservoir, as indicated. Air continues to flow from the trainpipe to the auxiliary reservoir until the pressures equalize, when the main piston is balanced. The main piston constitutes a movable partition wall, separating trainpipe and auxiliary-reservoir pressures, and, in studying the operation of the triple valve under various conditions, the first essential consideration is always as to which face of the main piston is exposed to the greater pressure : this determines the direction in which it will move. 70 pounds is the usual trainpipe pressure, acting upon both faces of the main piston when the trainpipe and auxiliary reservoirs are fully charged.

Service Application.

To apply brakes for a service stop, a gradual reduction of trainpipe pressure is necessary ; and, for the purpose of illustration, the first reduction will be assumed to be one of five pounds, thus leaving a pressure of 65 pounds to act upon the trainpipe face of the main piston, while the original 70 pounds still operates upon the auxiliary-reservoir face. As a result of this reduction, the greater auxiliary-reservoir pressure forces the main piston to the left (Fig. 2). As the piston moves, it closes feed groove *i*, cutting off communication between the trainpipe and the auxiliary reservoir, and unseats graduating valve 7, establishing communication

between transverse passage *W* and port *Z* of the slide valve. When the graduating valve has become unseated, the collar at the end of the piston stem engages the slide valve, which is then also drawn to the left in the further movement of the piston, thereby cutting off communication between exhaust cavity *n* in the slide valve and passage *r* leading to the brake cylinder. The movement of the main piston to the left is arrested by contact of its stem *j* with graduating stem 21, held in position by graduating spring 22. In this position, port *Z* in the slide valve registers with port *r*, and auxiliary reservoir air flows through ports *W* and *Z* of the slide valve and passage *r* to the brake cylinder at C. When the auxiliary-reservoir pressure has become, through expansion into the brake cylinder, slightly less than that (65 pounds) upon the trainpipe face of the main piston, the greater trainpipe pressure forces the piston back sufficiently to seat the graduating valve, as shown in Fig. 3. This is known as the "lap" position.

If it be subsequently desired to apply the brake with greater force, a further trainpipe reduction is made, which again leaves auxiliary-reservoir pressure in excess of that in the trainpipe, whereby it again forces the main piston to the left and unseats graduating valve 7, the slide valve not moving. A corresponding further reduction of auxiliary-reservoir pressure results, through discharge of air into the brake cylinder. Such trainpipe reductions may be repeated until the auxiliary-reservoir and brake-cylinder pressures have finally equalized: the brake is then fully applied, and any further trainpipe reduction is but a waste of trainpipe air. A total reduction of about 20 pounds causes the auxiliary-reservoir and brake-cylinder pressures to equalize.

Release.

To release the brake, the engineer admits the excess pressure of the main reservoir into the trainpipe, thus increasing the pressure upon the trainpipe face of the main piston until it becomes greater than that upon the auxiliary-reservoir face and thereby forcing the piston to its position at the extreme right, as shown in Fig. 1. In this position, the air in the brake cylinder is discharged through passage *r*, exhaust cavity *n* in the slide valve, and passage *p* into atmosphere, either directly or through the pressure-retaining valve, where employed. Feed groove *i* being again uncovered in this position of the piston, the auxiliary reservoir becomes recharged with air from the trainpipe.

Emergency Application.

A gradual reduction of trainpipe pressure causes the main piston to move to the left until stem *j* encounters stem 21, when the tension of the graduating spring prevents further movement; but a sudden trainpipe reduction causes the main piston to move out so quickly that graduating spring 22 cannot withstand the impact of stem *j*, but yields so that the piston moves to the position shown in Fig. 4. In this position of the parts, a diagonal slot in the slide valve (shown in Fig. 5) uncovers port *t* (indicated by the dotted lines just below the letter *Z*), which admits air from the slide-valve chamber to the chamber above emergency piston 8. Piston 8 is thereby forced downward and unseats emergency valve 10, allowing the pressure in the small chamber *Y* above check valve 15 to escape into the brake cylinder. Trainpipe pressure instantly raises the check valve and trainpipe air rushes through chambers *a*, *Y* and *X* into the brake cylinder at

TO AUX
RES'R.
30
TO BRAKE
CYL'D.
14

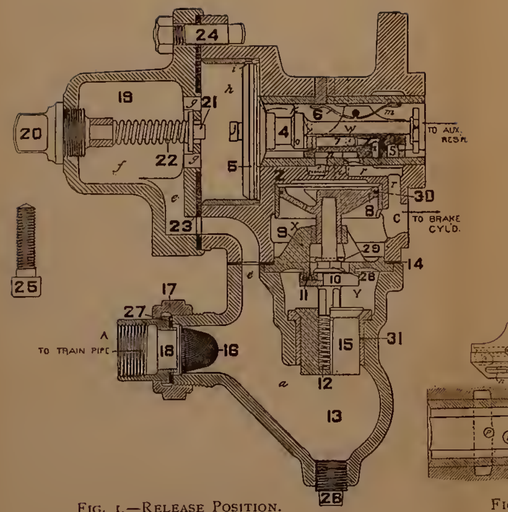

FIG. 1.—RELEASE POSITION.

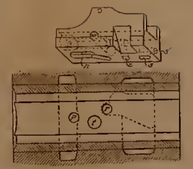

FIG. 5.

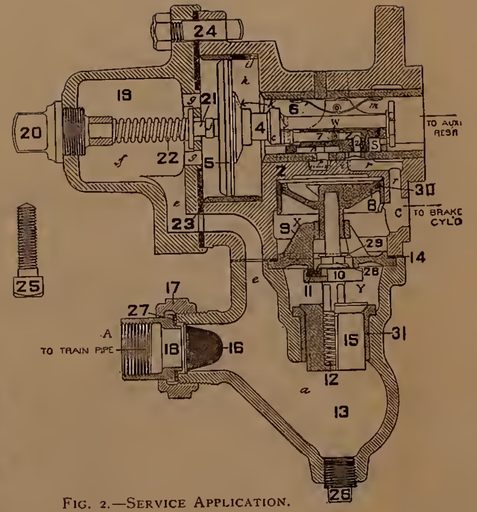

FIG. 2.—SERVICE APPLICATION.

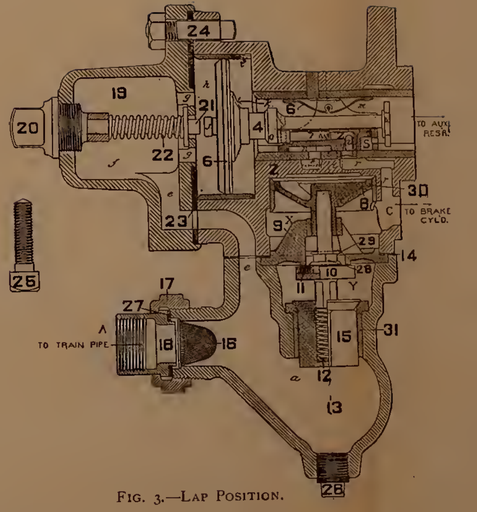

FIG. 3.—LAP POSITION.

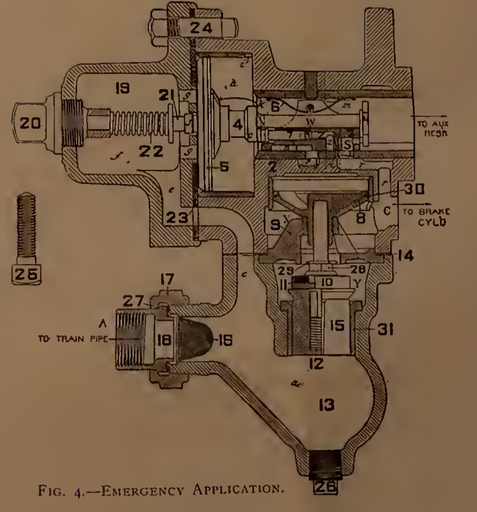

FIG. 4.—EMERGENCY APPLICATION.

QUICK-ACTION TRIPLE VALVE.

C. Air from the auxiliary reservoir simultaneously flows through port *S* of the slide valve and passage *r* into the brake cylinder ; but, port *S* being very small in comparison with the passageway through chambers *a*, *Y* and *X*, very little auxiliary-reservoir air reaches the brake cylinder before the trainpipe discharge thereto is completed. It thus occurs that, in an emergency application, an increased brake-cylinder pressure is secured through the presence of the air supplied by the trainpipe in addition to that from the auxiliary reservoir, which is the only source of air pressure for the brake cylinder in service applications of the brakes.

The rapid discharge of air from the trainpipe into the brake cylinder, in the manner just described, causes a sudden reduction of trainpipe pressure, which causes a similar operation of the triple valve upon the next car ; the operation of that valve similarly affects the next, and so on, serially, throughout the train.

The release is accomplished in the same manner as that after a service application.

The Plain Triple Valve.

The Plain Triple Valve is illustrated on Plate 18, and its location in the brake system is indicated on Plate 2.

In a service application, the operation of the plain triple valve is precisely the same as that of the quick-action valve, already described, and the operating parts involved are, in all essential respects, identical. The absence of the emergency-valve mechanism, through which quick serial operation and a relatively higher brake-cylinder pressure are secured by the quick-action valve, is the essential difference in the structures.

It will be observed that the slide valve of the plain triple valve is shorter than that of the quick-action triple valve : this is explained in describing the emergency application of the brake. Upon a sudden reduction of trainpipe pressure, the piston strikes the graduating stem, compresses its spring, and moves to its extreme downward position. In this position, the upper edge of the slide valve is below the lower edge of the service port in the slide-valve bushing, and unobstructed communication between the auxiliary reservoir and the brake cylinder is secured through comparatively large ports. Instead of passing through the slide valve passages, as in a service application, the air from the auxiliary reservoir, entering the triple valve through a pipe connected at *B*, discharges directly into the brake cylinder through port *r*. In an emergency application, therefore, the less restricted passages cause the full brake-cylinder pressure to occur more promptly ; but the absence of the emergency valve in the structure of the plain triple valve results in no quick serial action from car to car and in no greater final brake-cylinder pressure than may occur in a service application.

It will be further observed that the plain triple valve

PLATE 18.

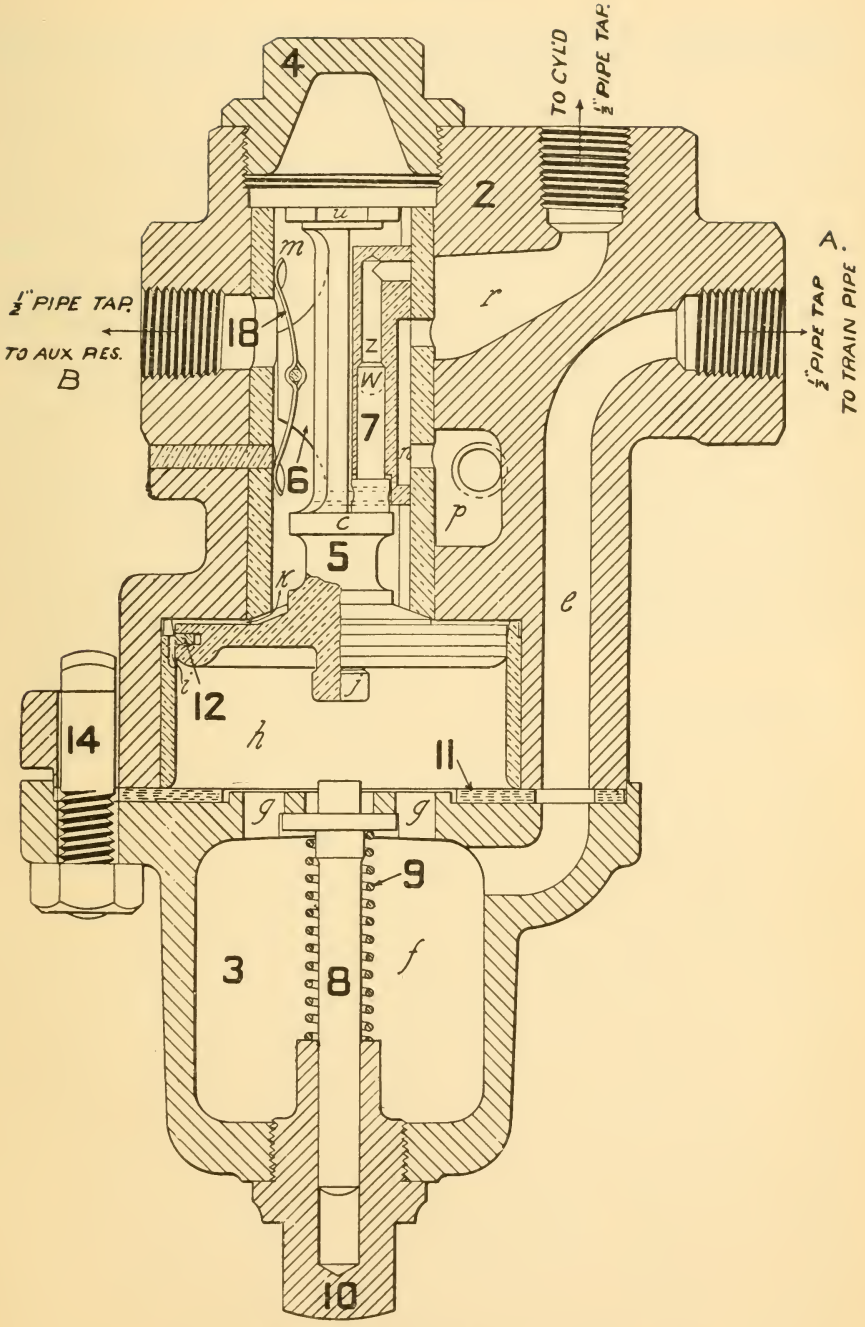

PLAIN TRIPLE VALVE.

of Plate 18 has not the familiar four-way cock ; the triple valve is the same, however, aside from the elimination of this part, which came into use at a time, long passed, when there were many straight-air brakes in service. At that time, if there were many straight-air brakes in a train, any automatic brakes in the train could be transformed into the straight-air brake by means of this cock. When the straight-air brake disappeared, a lug was so added to the four-way-cock handle that, while the brake could be cut out of service, if necessary, by means of the cock, it could no longer be converted into the straight-air brake. A further step has now been taken and the cock is entirely eliminated and replaced by a cut-out cock in the cross-over pipe between the main trainpipe and the triple valve, the same as where the quick-action triple valve is employed.

The Combined Freight-Car Cylinder, Reservoir and Triple Valve.

The Combined Freight-Car Cylinder and Reservoir (Plate 19) is the usual form of equipment applied to a freight car. Upon some cars, the cylinder and auxiliary reservoir are separated, but the triple valve, auxiliary reservoir, and brake cylinder are the same in both cases.

Auxiliary reservoir 10 is simply a hollow shell for the purpose of storing air for use in the brake cylinder upon the same car.

Pipe *b* provides communication between the triple valve and the brake cylinder. Upon passenger cars, this pipe does not pass through the auxiliary reservoir, but the operation of the brake is the same ; it is simply a different arrangement of the same parts.

2 is the brake cylinder ; 3 is the sleeve in which the push rod, connected with the system of brake levers, is inserted ; 4 is the non-pressure cylinder head ; 9 is a release spring which forces piston 3 to the release position when the air pressure is released from the pressure end of the cylinder ; 7 is a packing leather which is pressed against the cylinder wall to prevent air from escaping past the piston ; 8 is a round spring packing expander which serves to hold the flange of the packing leather against the walls of the cylinder ; 6 is the follower plate, which, by means of studs and nuts 5, clamps the packing leather to the piston ; and *a* is a small groove (indicated by dotted lines) in the wall of the cylinder, called the leakage groove. If the exhaust port of the slide valve of the triple valve should, in any manner, become obstructed when it is not desired to have the brakes applied, a slight flow of air into the cylinder from any cause will, instead of forcing the piston out,

PLATE 19.

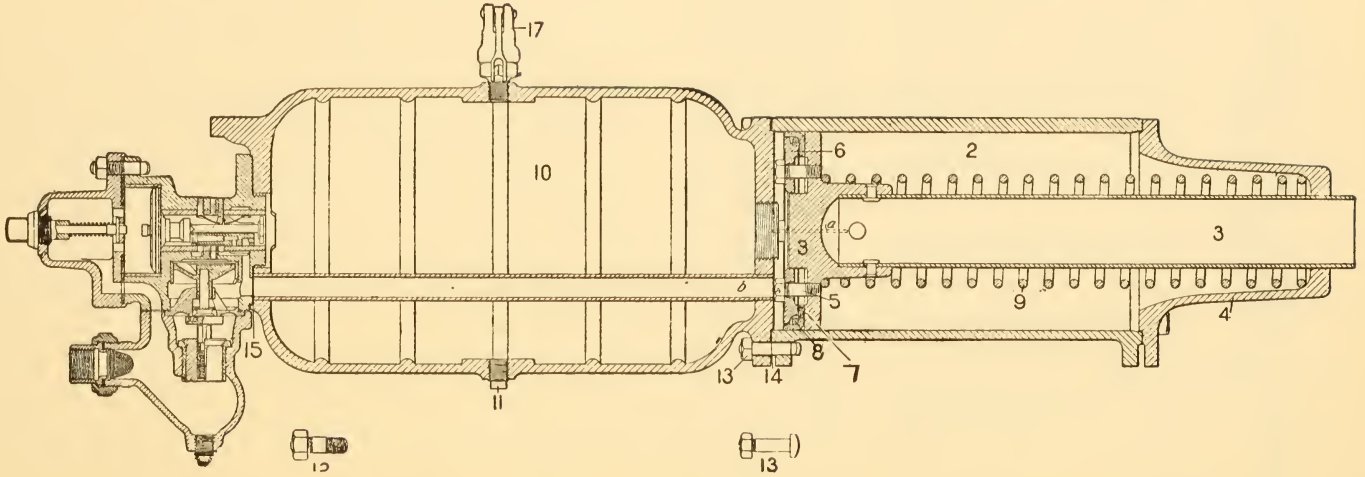

CONBINED FREIGHT-CAR CYLINDER, RESERVOIR AND TRIPLE VALVE.

escape through leakage groove *a* to the atmosphere at the non-pressure end of the cylinder. Valve 17, usually placed above the auxiliary reservoir, is known as the release valve. A rod extends from the arms of this valve to each side of the car, and pulling either rod unseats the valve and discharges air from the reservoir for the purpose of releasing the brake.

The Pressure-Retaining Valve.

The Pressure-Retaining Valve (Plate 20) is used almost exclusively upon freight cars, except in districts where very heavy grades are encountered, where it is also used upon passenger cars.

With the Pressure Retaining Valve in operation, a certain portion of the brake-cylinder pressure may be retained to retard the acceleration of the train while the engineer is recharging the auxiliary reservoirs. The pressure of the air reserved in the cylinder is determined by weight 4, which, in the standard valve, is capable of retaining a pressure of fifteen pounds per square inch, which has been found by experience to furnish sufficient retarding power to prevent a too rapid acceleration of the train speed, and to thus provide sufficient time to enable the engineer to recharge the train upon heavy grades.

When handle 5 points downward, the valve is inoperative for retaining pressure. If the engineer release the brakes when the retaining-valve handle is turned down, the air from the brake cylinder discharges through the triple valve into the retaining-valve pipe (which is screwed into the triple-valve exhaust port), through the pipe to the retaining valve, which it enters at *X*, and through ports *b*, *a* and *c* to the atmosphere. If handle 5 be turned horizontally, as shown on Plate 20, the air is discharged from the brake cylinder through the triple valve, retaining-valve pipe, and ports *b*, *a* and *b*, as before ; but now, port *c* being closed, it must lift weighted valve 4 and pass to the atmosphere through the restricted port *d*. When the brake-cylinder pressure has become reduced to fifteen pounds, the weighted valve becomes seated, and the remaining fifteen pounds is retained in the brake cylinder until handle 5 is turned down.

PLATE 20.

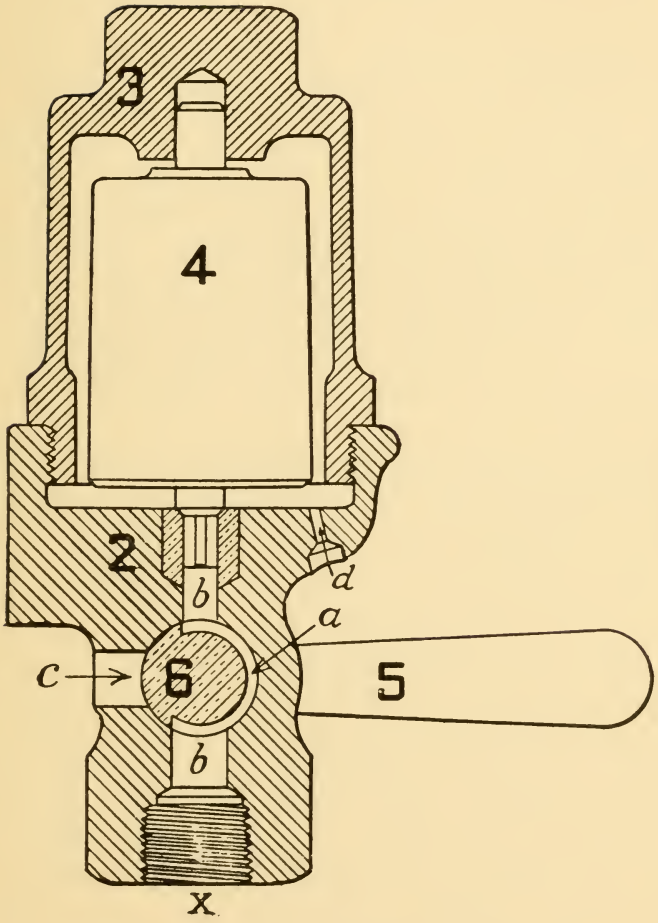

PRESSURE-RETAINING VALVE.

The Pressure-Retaining Valve has nothing whatever to do with applying the brake or admitting air into the cylinder ; it simply locks in the brake cylinder fifteen pounds of the air pressure that has been supplied through the triple valve, and then only if handle 5 has been placed in the horizontal position, shown on Plate 20, before the engineer increases trainpipe pressure to release the brakes.

The Improved Pressure-Retaining Valve (Plate 20) has a peripheral cavity extending half way round the key, through which the air has to pass to reach the weighted valve, when the device is in operation. This modification is designed to prevent obstruction of the ports, which sometimes occurred with the old form of construction, in which the cavity was replaced by a slot extending through the key.

Failure of the Pressure-Retaining Valve to hold air in the brake cylinder is generally due to a leak in the connecting pipe, a frequent seat of trouble being at the union : it may also be due to a leak in the brake cylinder or in the Retaining Valve, but seldom in the latter.

The structure should stand vertically ; there should be no obstruction to the removal of the cap ; it should be so located as to be free of access when the train is in motion ; it should be cleaned, but not oiled, every time the remainder of the air-brake equipment receives that attention ; both it and the connecting pipe should be well secured ; a good rubber gasket should be used in the union, and a little flexibility should be provided in the pipe leading to it from the triple valve.

Piston Travel.

The following are commonly used terms and their definitions.

STANDING TRAVEL—The distance the piston is forced outward in applying the brake upon a car when not in motion.

RUNNING TRAVEL—The distance the piston is forced out in applying the brake upon a car when in motion. The running travel is always greater than the standing travel, the increase being due to slack in loose-fitting brasses, to the shoes pulling down upon the wheels, to play between boxes and pedestals, and to everything of a similar nature that increases lost motion in the brake rigging under the influence of the motion of the car.

FALSE TRAVEL—An excessive travel momentarily occurring while a car is in motion ; it is due to unevenness of the track, or to some unusual temporary strain.

The brake-cylinder pressure resulting from a given trainpipe reduction is greater with a short than with a long piston travel.

A piston travel of 8 inches results in a brake-cylinder pressure of about 50 pounds, in a full service application of the brake. Inasmuch as running travel is generally about one and one-half inches greater than standing travel, the standing travel should be 6½ inches to secure this result while running. An automatic slack adjuster is the only means of adjusting piston travel so closely ; but, where one is not employed, good practice customarily requires that the standing piston travel on cars should be kept as close as possible to 6 inches.

A 10-pound reduction of trainpipe pressure results in a brake-cylinder pressure more than 50 per cent. greater with a 4-inch than with an 8-inch piston travel.

Where the piston travel varies throughout a train, a sufficient trainpipe reduction must be made to fully apply the brakes having the longest piston travel ; in releasing, the increasing trainpipe pressure will force the triple-valve piston on the car with an 11-inch piston travel to release position first, the one on the car with a 10-inch travel next, and so on down, those with the shortest travel being applied with the greatest force and releasing last.

It will be clear, therefore, that satisfactory operation can only be secured by uniformity of piston travel upon all cars in a train. If the piston travel be unnecessarily long, the brake-cylinder pressure is thereby reduced and the efficiency of the brakes correspondingly impaired ; in addition, a greater quantity of compressed air is consumed in brake applications than would otherwise be necessary, thereby entailing greater demands upon the air pump, with correspondingly increased wear and tear. If the piston travel be *too* short, it is apt to be accompanied by dragging of the brake shoes upon the wheels while the brakes are released, and by too high a brake-cylinder pressure, with an accompanying liability of sliding wheels, when the brakes are applied. The proper piston travel is generally that with which there is just sufficient brake-shoe clearance when the brakes are released. As already stated, a standing piston travel of about six inches has been found to customarily meet this requirement. Special conditions undoubtedly occur in certain cases under which a uniformly shorter piston travel may be very advantageously employed ; in such cases, a modification of the brake leverage may perhaps also be desirable, on account of the high cylinder pressures so resulting.

In adjusting piston travel, it should be carefully noted whether the brake beams are so hung as to be at the same

height above the rail when the car is light as when loaded, or are so hung that they are lowered when the car springs are compressed through loading the car and are raised when the load is removed. If the brake beams are always at the same height above the rail, it is safe to adjust the piston travel when the car is either light or loaded ; but if the height of the beams varies according to the load in the car, it is best, whenever possible, to adjust the piston travel when the car is light. If the travel be adjusted when the car is loaded, and the brake shoes are consequently in their lowest position, wheels are very likely to be slid after the car is unloaded, as, the shoes being thereby raised, the shoe clearance becomes less and the piston is not required to travel so far to bring the shoes up to the wheel tread. As a consequence, the piston travel may become too short and, the car then being light, flat wheels are likely to result. If the piston travel be adjusted when the car is light, the shoe clearance becomes increased as the load causes the car to settle. This results, of course, in lower brake-cylinder pressures and, consequently, in inferior brake efficiency ; but the danger of injurious wheel sliding is avoided.

Piston travel should be adjusted as uniformly as possible throughout a train, in which case each brake will more nearly do its share of work, there will be fewer flat wheels, and smoother braking will result.

The Automatic Slack Adjuster.

The Automatic Slack Adjuster is a simple mechanism, by means of which a predetermined piston travel is constantly maintained, compelling the brakes of each car to do their full quota of work—no more and no less—thus securing from the brakes their highest efficiency, without the flat wheels which are likely to accompany a wide range of piston travel.

This device establishes the running piston travel ; that is, the piston travel occurring when the brakes are applied while the car is in motion ; and, since this is the time during which the brakes perform their work, the running travel is the important one. Hand adjustment necessarily relies upon the standing travel, and it is only coarsely graded, at best, by the spacing of the holes in the dead-lever guide.

The Automatic Slack Adjuster is illustrated on Plates 21 and 22, and its operation is very simple. The brake-cylinder piston acts as a valve to control the admission and release of brake-cylinder pressure to and from pipe *b* (Plate 21) through port *a* in the cylinder, this port being so located that the piston uncovers it when the predetermined piston travel is exceeded. Whenever the piston so uncovers port *a*, brake-cylinder air flows through pipe *b* into slack-adjuster cylinder 2, where the small piston 19 (Plate 22) is forced outward, compressing spring 21. Attached to piston stem 23 is a pawl, extending into casing 24, which engages ratchet wheel 27, mounted within casing 24 upon screw 4 (Plate 21). When the brake is released and the brake-cylinder piston returns to its normal position, the air pressure in cylinder 2 escapes to the atmosphere through pipe *b*, port *a* and the non-pressure head of the brake cylinder, thus permitting spring 21 to force the small piston to its

PLATE 21.

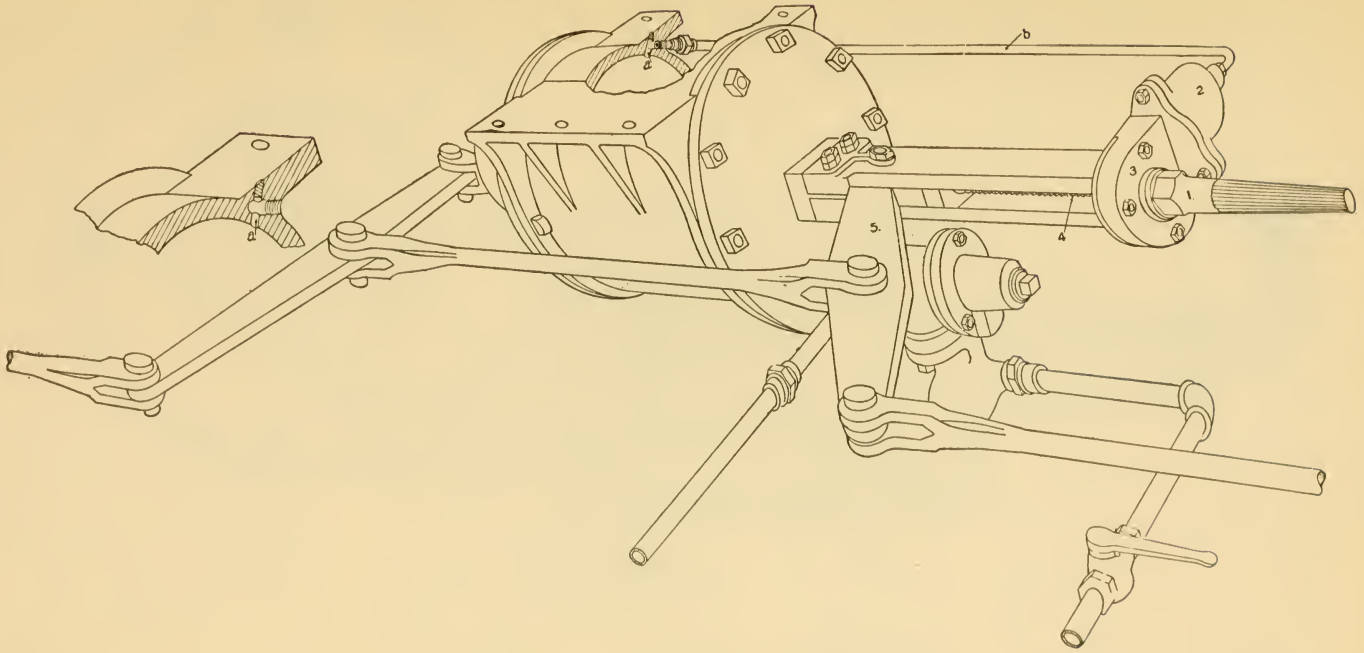

AUTOMATIC SLACK ADJUSTER.

PLATE 22.

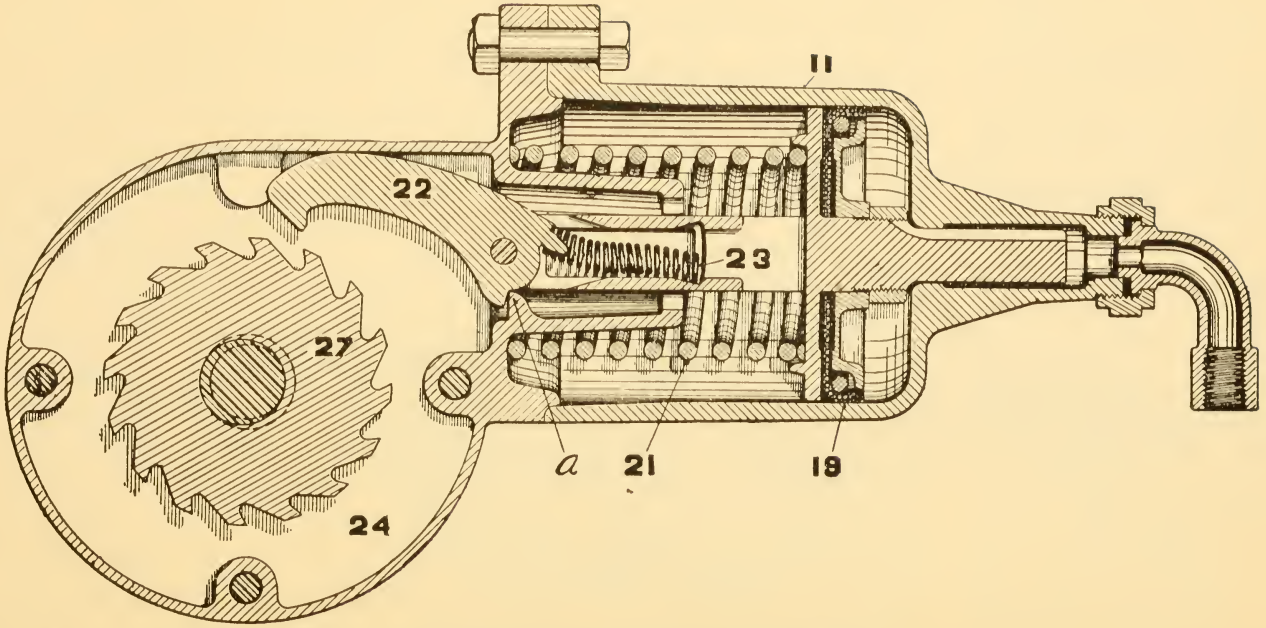

AUTOMATIC SLACK ADJUSTER.

normal position. In so doing, the pawl turns the ratchet wheel upon screw 4, and thereby draws lever 5 slightly in the direction of the slack-adjuster cylinder, thus shortening the brake-cylinder piston travel and forcing the brake shoes nearer the wheels. As the pawl is drawn back to its normal position, a lug on the lower side strikes projection *a* (Plate 22) on the cylinder, thus raising the outer end of the pawl, disengaging it from the ratchet wheel, and permitting the screw to be turned by hand if desired.

To apply new shoes, turn casing 1 to the left, thus moving lever 5 toward the position shown on Plate 21, until sufficient slack is introduced in the brake rigging. To bring the shoes closer to the wheels and shorten the piston travel, turn casing 1 to the right.

The screw mechanism is so proportioned that the piston travel is reduced only about $1/32$ of an inch in each operation, which removes danger of unduly taking up false travel.

Port *a* should be drilled as indicated on Plate 23.

To avoid the necessity of a bracket to support the adjuster, a special cylinder head, provided with a suitable lug, has been designed for that purpose, and is now furnished with truck, tender, and car cylinders, unless other styles be specified.

After the slack adjuster has been applied and the pipe tested for leaks, sufficient slack should be introduced in the brake gear, by means of the adjuster, and an entire new set of shoes applied. The slack should then be taken up, by turning casing 1 to the right, until the standing piston travel is from six to six and one-half inches, care being exercised to distribute the slack equally on both trucks by giving about the same angle to the dead levers. When the brake gear of a car, having a proper total leverage, is thus

equalized, the adjuster will maintain a constant piston travel until a full set of shoes has worn out, without any necessity of changing the position of the dead levers.

The dead and live levers should each have such an inclination, when new shoes are applied to the wheels, that they shall have corresponding inclinations in the opposite direction when the shoes have become worn out. The proper inclination of the dead lever is established by securing the upper pin at a distance half the wearing thickness of the shoe nearer a vertical plane through the axle than that of the brake-beam clevis pin from the same plane, when new shoes are applied to the wheels. The proper inclination of the live lever is then secured by making the connecting rod or strut between the levers shorter, if outside hung-brakes, or longer, if inside hung-brakes, than the distance between the two brake-beam-clevis pins, by the wearing thickness of a shoe, the distance between the two brake-beam pins being measured when the shoes are all new and applied to the wheels.

If the piston travel become too short, it will be found that either some of the slack in the brake rigging has been taken up by the hand brake, where the two work in opposition, or the dead levers have been moved.

If the piston travel is found to be too long, when the small pipe leading to the adjuster cylinder is free from obstruction and the packing leather in the adjuster cylinder is free from leakage, it is more than probable that the slack has been taken up through an application and only partial release of the hand brake, and subsequent full release occurred only after the shoes had had time to wear more or less.

The best results are obtained by the use of copper pipe from the brake cylinder to the adjuster cylinder, since this

pipe is more flexible and does not corrode. It should always be firmly secured.

Every time the brake cylinder is cleaned and oiled, the slack-adjuster cylinder should obviously receive the same attention ; and, after each cleaning and oiling, a test of the brakes should also include one of the adjuster.

PLATE 23.

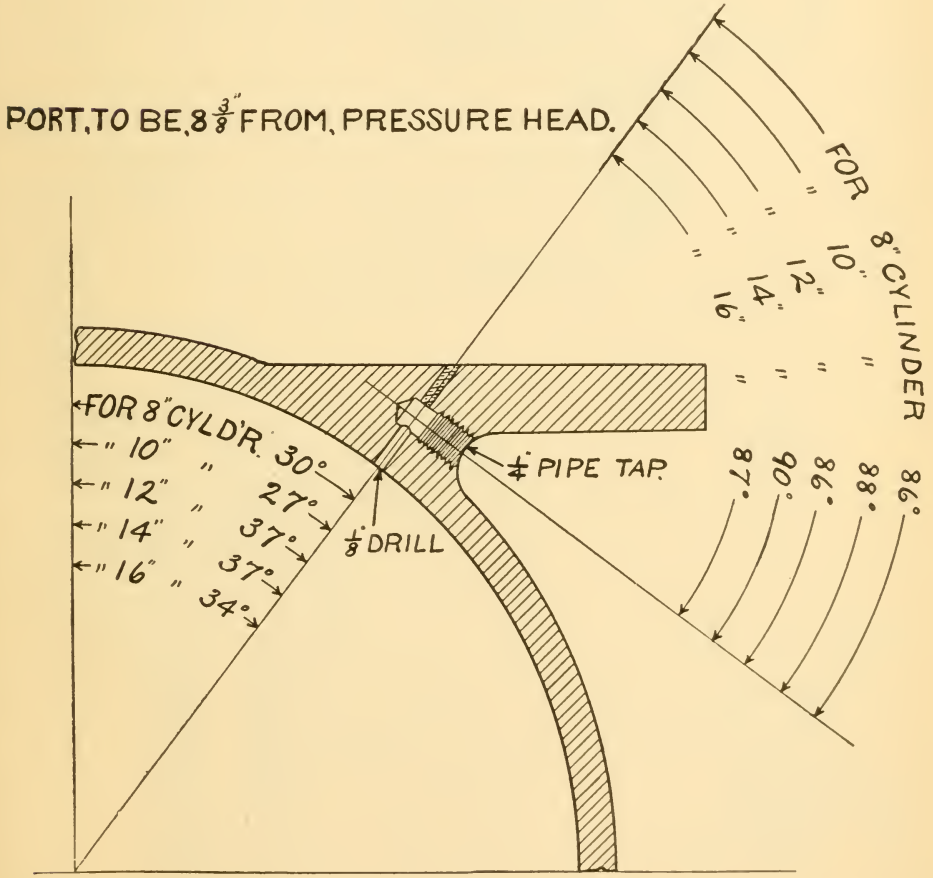

METHOD OF DRILLING BRAKE CYLINDER FOR SLACK-ADJUSTER PIPE CONNECTION.

PLATE 24.

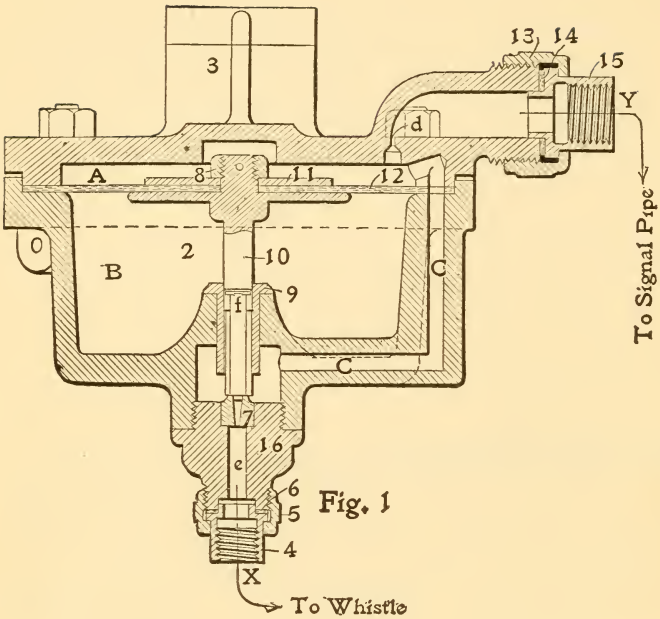

Fig. 1

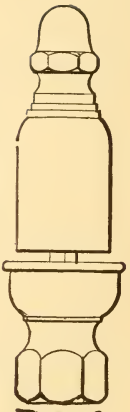

Fig. 3

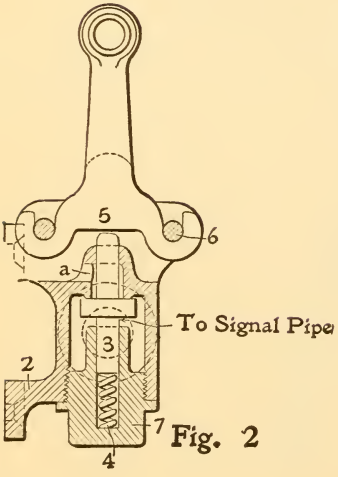

Fig. 2

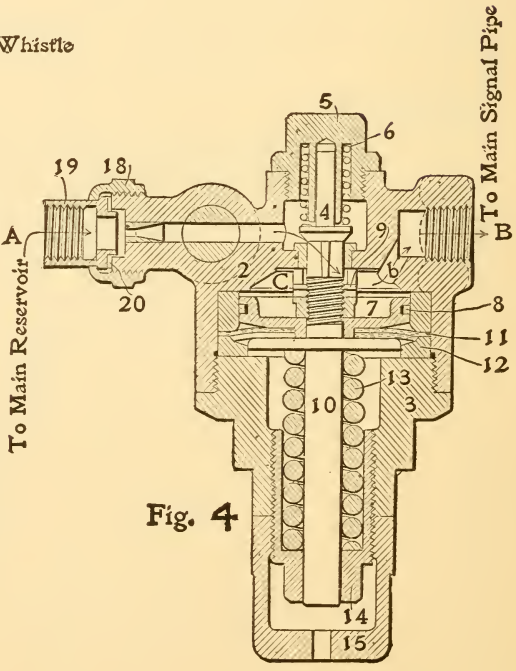

Fig. 4

AIR-SIGNAL SYSTEM DETAILS.

The Train Air-Signal System.

Plate 26 shows the general arrangement of the parts of the Train Air-Signal System upon a locomotive, tender and car ; a more detailed description of the arrangement will be unnecessary. This Plate is not intended to show the exact location of the parts, but is a diagrammatic illustration of the general arrangement only.

Description of Parts.

The Improved Reducing Valve.

Fig. 4, Plate 24, shows the Improved Reducing Valve. An air pressure of 40 pounds should be carried in the signal system, and it is the function of this valve to reduce the main-reservoir pressure to this standard for use in the signal pipe.

7 and 10 are the reducing-valve piston and stem, which are supported by the tension of spring 13 and lowered by the pressure in chamber C, when sufficient to overcome the tension of the spring ; 4 is the supply valve, which is moved from its seat by the stem of piston 7 and is seated by the tension of spring 6.

The tension of spring 13 is so adjusted, by regulating nut 14, that an air pressure of 40 pounds in chamber C is required to depress piston 7. When the valve is in the position shown, air from the main reservoir enters through the pipe connected at A, and, as indicated by the arrows, flows through chamber C into the signal pipe connected at B. As soon as signal-pipe pressure reaches 40 pounds, the pressure in chamber C forces piston 7 down and allows valve 4 to seat. No more air can then enter the signal pipe until, through leakage or otherwise, the signal-pipe pressure becomes reduced so that spring 13 may raise piston 7 to unseat supply valve 4.

The Old-Style Reducing Valve.

In the Old-Style Reducing Valve (Plate 25), the tension of spring 9, between cap 3 and diaphragm 7, forces supply valve 5 from its seat, whenever the air pressure acting upon diaphragm 7 is insufficient to compress the spring. The parts being in the positions shown in the cut, air from the main reservoir enters at Z, passes unseated valve 5 into chamber A below diaphragm 7, and discharges into the signal pipe at Y. When the pressure below diaphragm 7 becomes sufficient to overcome the tension of regulating spring 9, diaphragm 7 is thereby raised, and valve 5 is seated by the tension of spring 10. A subsequent reduction of signal-pipe pressure permits regulating spring 9 to again force diaphragm 7 down and unseat valve 5.

The Signal Valve.

In the Signal Valve (Fig. 1, Plate 24), the two compartments A and B are separated by diaphragm 12, and diaphragm stem 10, secured thereto, extends through bushing 9, its end acting as a valve on seat 7 of cap nut 16, above passage *e*. Diaphragm stem 10 fits bushing 9 snugly for a short distance below its upper end, to where a peripheral groove is cut in the stem, below which it is milled in triangular form. The air enters the signal valve at Y and flows through port *d*, charging chamber A, and through passage *c*, passing stem 10, into chamber B. The whole being charged, a sudden reduction of pressure in the signal pipe reduces the pressure in chamber A, above diaphragm 12, and the unreduced pressure in chamber B, acting upon its lower surface, forces diaphragm 12 upward and momentarily permits air to escape from the signal pipe and chamber B to the whistle, through a pipe attached at X.

PLATE 25.

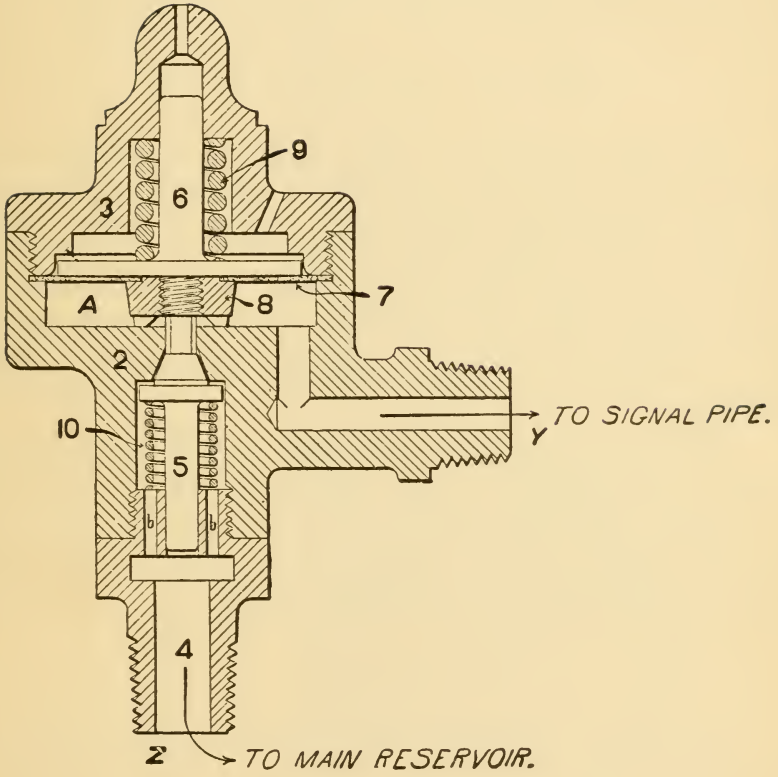

OLD-STYLE REDUCING VALVE.

The resulting blast of the small signal whistle (Fig. 3), located in the locomotive cab, is a signal to the engineer. The same sudden reduction of pressure also operates upon the reducing valve to cause air from the main reservoir to flow into the signal pipe and restore the pressure. Equilibrium of pressure quickly occurs in chambers A and B, and the valve at the end of stem 10 returns to its seat.

The Car Discharge Valve.

The Car Discharge Valve (Fig. 2) is usually located outside of the car, above the door and opposite the opening through which the signal cord passes. A branch pipe extends from the main signal pipe to the Car Discharge Valve, and in this pipe is placed a one-half-inch cock, by means of which the valve on the car may be cut out when desired.

Each pull upon the signal cord causes lever 5 to open valve 3, permitting a small quantity of air to escape from the signal pipe, and thereby causes a signal to be transmitted to the engineer, through the operation of the Signal Valve and Whistle, as previously described.

General.

Inasmuch as any discharge of air from the signal pipe causes the air whistle to sound on the locomotive, it is obvious that all air-signal pipes should be perfectly tight, so that signals may not be incorrect and may not occur when not intended.

An interval of three seconds, in which to assure recharging of the signal pipe, should be permitted to elapse between successive discharges of air from the car discharge valve. Upon trains of exceptional length, this time interval should be slightly increased.

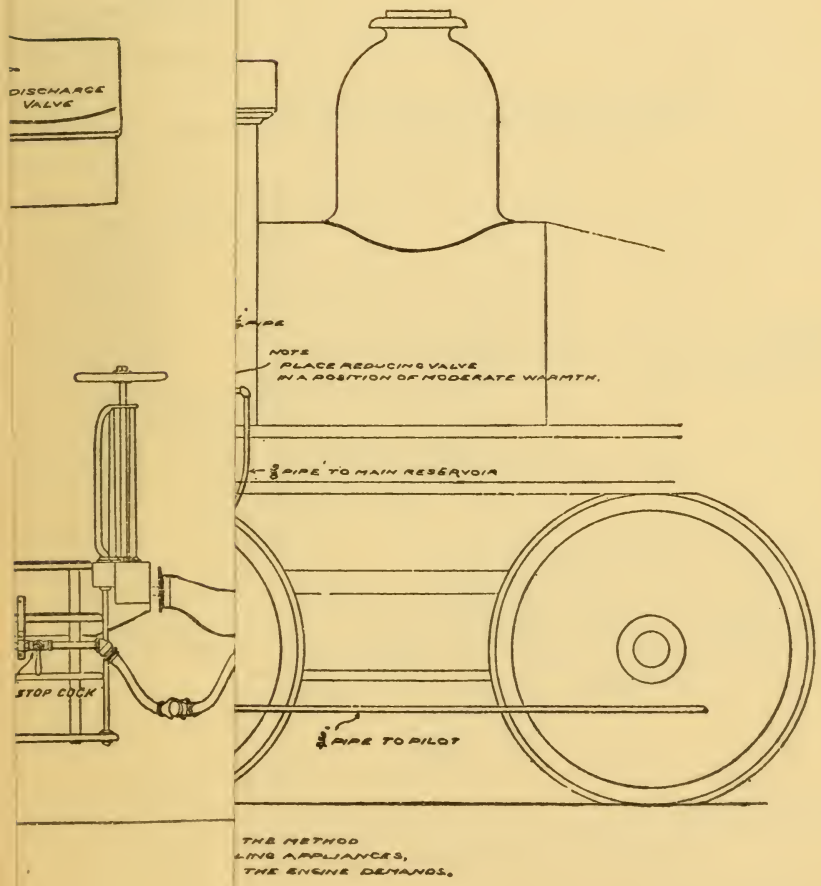

THE METHOD
LING APPLIANCES,
THE ENGINE DEMANDS.

PLATE 26.

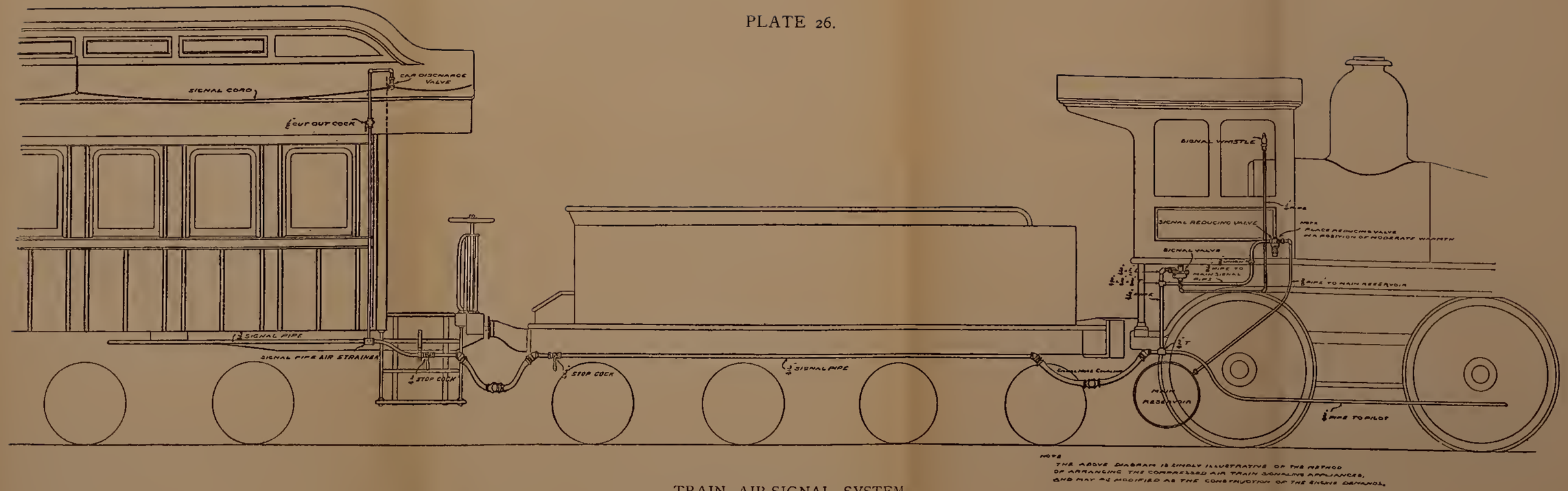

TRAIN AIR-SIGNAL SYSTEM.

Wherever possible, the Reducing Valve and Signal Valve should be so located inside the cab that they will be protected from both cold and excessive heat.

The signal-pipe air strainer upon the car should always be located as indicated upon Plate 26.

A special form of air-strainer is now provided for use between the main reservoir and the reducing valve upon locomotives.

The High-Speed Brake.

The High-Speed Brake, illustrated on Plate 27, is a modification of the Quick-Action Air Brake, through the addition of the appliances outlined in red. A further modification is made in the standard equipment, by substituting a quick-action triple valve for the plain triple valve usually employed upon the tender, and also by the use of a special plain triple valve to operate the driver and truck brakes. The names, method of connecting, and the adjustment of the parts are indicated on this Plate, and the construction and operation of the parts, with the exception of the Automatic Reducing Valve, have been explained in other parts of this book.

The locomotive equipment of Plate 27 may be changed from the Quick-Action to the High-Speed Brake by simply turning two handles—that of the reversing cock and that of the quarter-inch cut-out cock in the pipe leading to the 90-pound pump governor. When these handles are in the positions shown on Plate 27, the 70-pound feed valve and the 90-pound pump governor are in service, so that the locomotive is ready to operate the ordinary Quick-Action Brake ; 70 pounds pressure is carried in the train-pipe when the brake valve is in running position, and the pump will stop when main-reservoir pressure reaches 90 pounds.

If the reversing-cock handle be turned to the opposite position and the handle of the quarter-inch cock in the 90-pound-governor pipe be turned at right angles to its present position, the 110-pound feed valve and the high-pressure pump governor will become operative and, in the running position of the brake valve, 110 pounds trainpipe pressure and a main-reservoir pressure to correspond with the adjustment of the high-pressure governor will result.

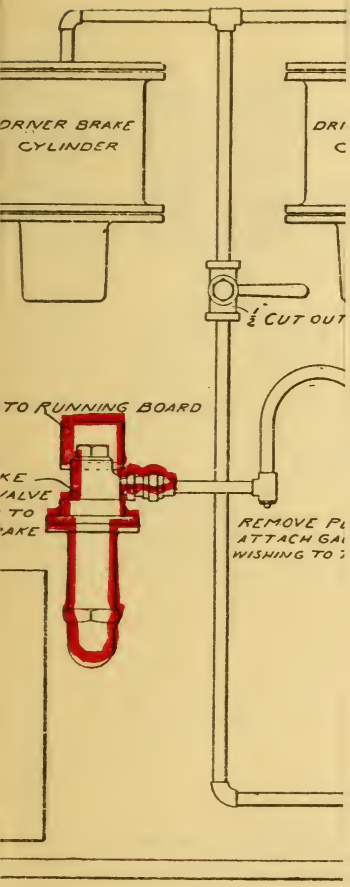
DRIVER BRAKE
CYLINDER
TO RUNNING BOARD
REMOVE PL
ATTACH GA
WISHING TO

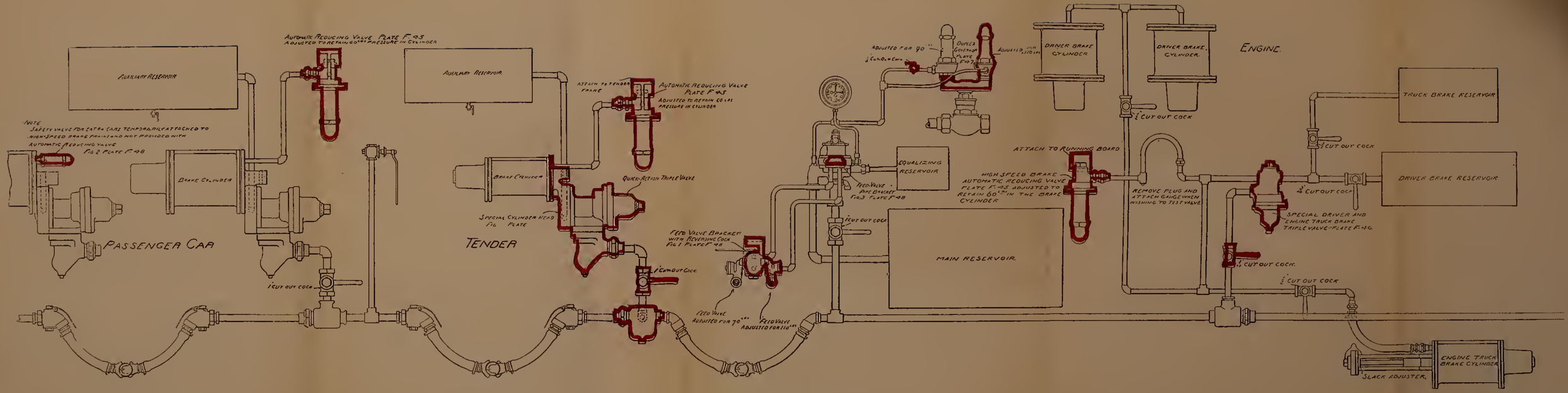

HIGH-SPEED BRAKE.

The Duplex Pump Governor consists simply of two diaphragm portions of the ordinary pump governor (only one of which operates at a time) connected with one steam-valve portion. A description of this governor would be but a repetition of the description of the pump governor in another part of this book.

The principles involved in the High-Speed Brake were discovered some years ago in a series of experiments known as the Westinghouse-Galton tests.

These principles are that (a) the friction between the brake shoe and the wheel, which tends to stop the rotation of the wheel, becomes less as the rapidity of rotation of the wheel increases, and that (b) the adhesion between the wheel and rail remains practically constant regardless of the speed. It will thus be seen that, at high speeds, a greater brake-cylinder pressure, with corresponding increase of the brake-shoe pressure, can be used without danger of sliding wheels; but it is necessary to provide means for reducing this high cylinder pressure as the speed of the train is decreased. This is accomplished by the Automatic Reducing Valve, shown in vertical cross section on Plate 28, Fig. 1. A horizontal cross section of this valve, through the point at which the connecting pipe to the brake cylinder is secured, is shown in Fig. 2. Plate 29 illustrates the application of the valve to a car, and Figs. 1, 2 and 3 of Plate 30 are vertical cross sections of the upper part of the valve, illustrating the various positions of the slide valve, as indicated.

The Automatic Reducing Valve.

When air enters the brake cylinder from the auxiliary reservoir, it has free access to the Reducing Valve through a pipe connected at Z (Plate 28, Fig. 2), so that chamber *d*, above piston 4, is always subject to brake-cylinder pressure. Regulating spring 11, adjusted by nut 12, provides a resistance to the downward movement of piston 4, which is finally arrested by spring box 3. Combined with piston 4 is its stem 6, fitted with two collars which control the movements of slide valve 8. Slide valve 8 (Plate 30) is provided with a triangular port *b* in its face, which is always in communication with chamber *d*. Port *a* in the slide-valve seat leads directly to the atmosphere, through exhaust opening Y (Fig. 1, Plate 28).

In Fig. 1, Plate 28, slide valve 8 and its piston 4 are shown in their normal positions, occupied so long as brake-cylinder pressure does not exceed 60 pounds.

It will be noted that, in release position (Plate 30, Fig. 1), port *b* of slide valve 8 does not register with port *a* of its seat, so that, when the brakes are applied, the air pressure is retained in the brake cylinder and is subsequently released in the usual way, unless it become sufficiently great to overcome the tension of spring 11 and force piston 4 downward.

When brake-cylinder pressure begins to exceed 60 pounds in a heavy service application, the pressure upon piston 4 moves it downward until port *b* in the slide valve registers with port *a* in its seat, as shown on Plate 30, Fig. 2, in which position any surplus brake-cylinder pressure is promptly discharged to the atmosphere. Spring 11 then raises the piston and slide valve to their normal positions (Plate 28, Fig. 1), closing the exhaust port and retaining 60 pounds pressure in the brake cylinder. In the operation

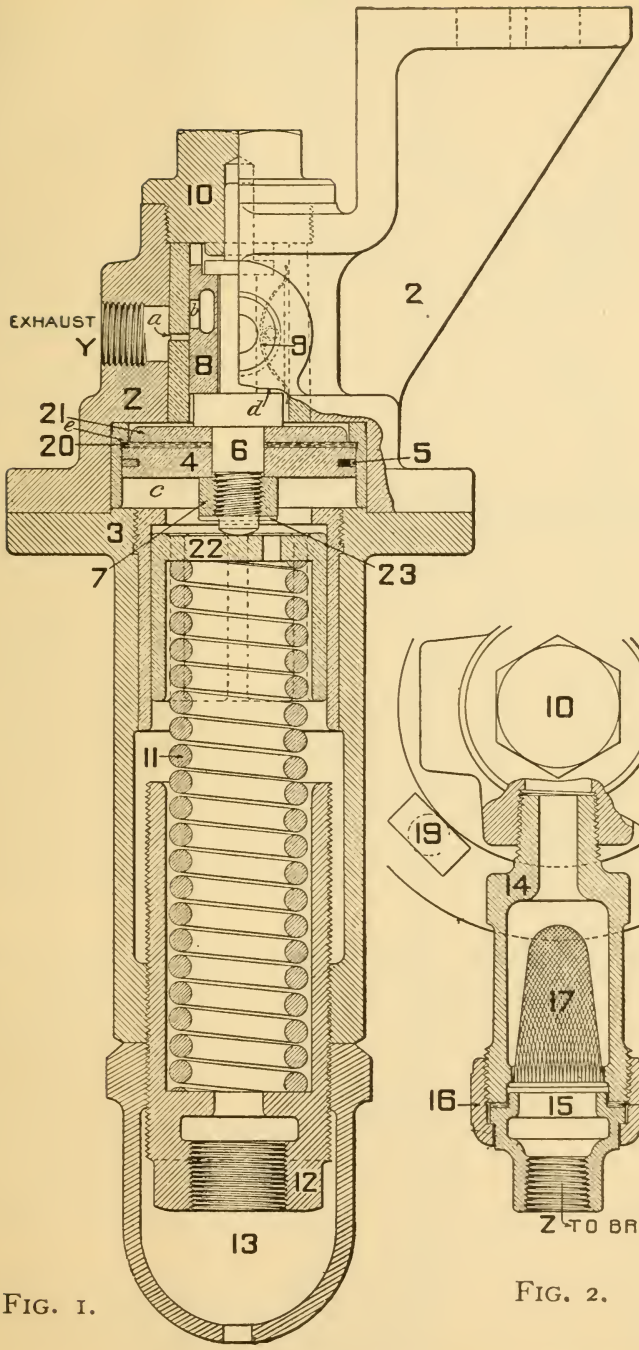

FIG. 1.

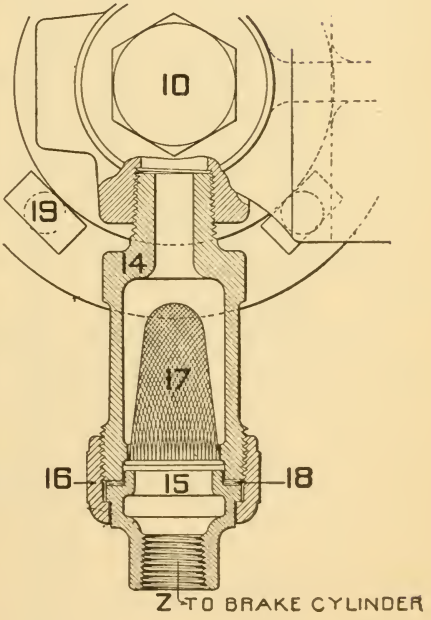

FIG. 2.

AUTOMATIC REDUCING VALVE.

just described, the greatest width of port *b* is exposed to port *a*, and these ports are so proportioned that, in this particular position, the surplus air is discharged from the cylinder fully as rapidly as it is admitted through the service-application port of the triple valve.

The positions assumed by piston 4 and slide valve 8 in an emergency application of the brakes, are shown on Plate 30, Fig. 3. The violent admission of air into the brake cylinder then so suddenly increases the pressure that piston 4 is forced to the lower end of its entire stroke, in which position the apex of triangular port *b* in the slide valve is brought into register with port *a*, and a comparatively slow discharge of brake-cylinder pressure takes place while the train is at its highest speed; but the area of the opening of port *b* gradually increases as the reducing pressure above piston 4 permits spring 11 to slowly raise the piston and slide valve. The rate of the discharge thus increases as the speed of the train decreases, until, finally, when the brake-cylinder pressure has become reduced to 60 pounds, port *a* is closed, and the remainder of the brake-cylinder pressure is retained until released in the usual way through the triple-valve.

When an emergency application of the brakes occurs at high speeds, there is little danger of wheel sliding, and it will be observed that port *b* is so shaped that brake-cylinder pressure escapes slowly ; while, at lower speeds, where a heavy, service application is more likely to occur, and there is a greater tendency toward wheel sliding, the base of triangular port *b* is exposed, allowing brake-cylinder pressure to reduce quickly.

It is essential that Automatic Reducing Valves should be occasionally inspected, to prevent possible leaks through the discharge port.

PLATE 29.

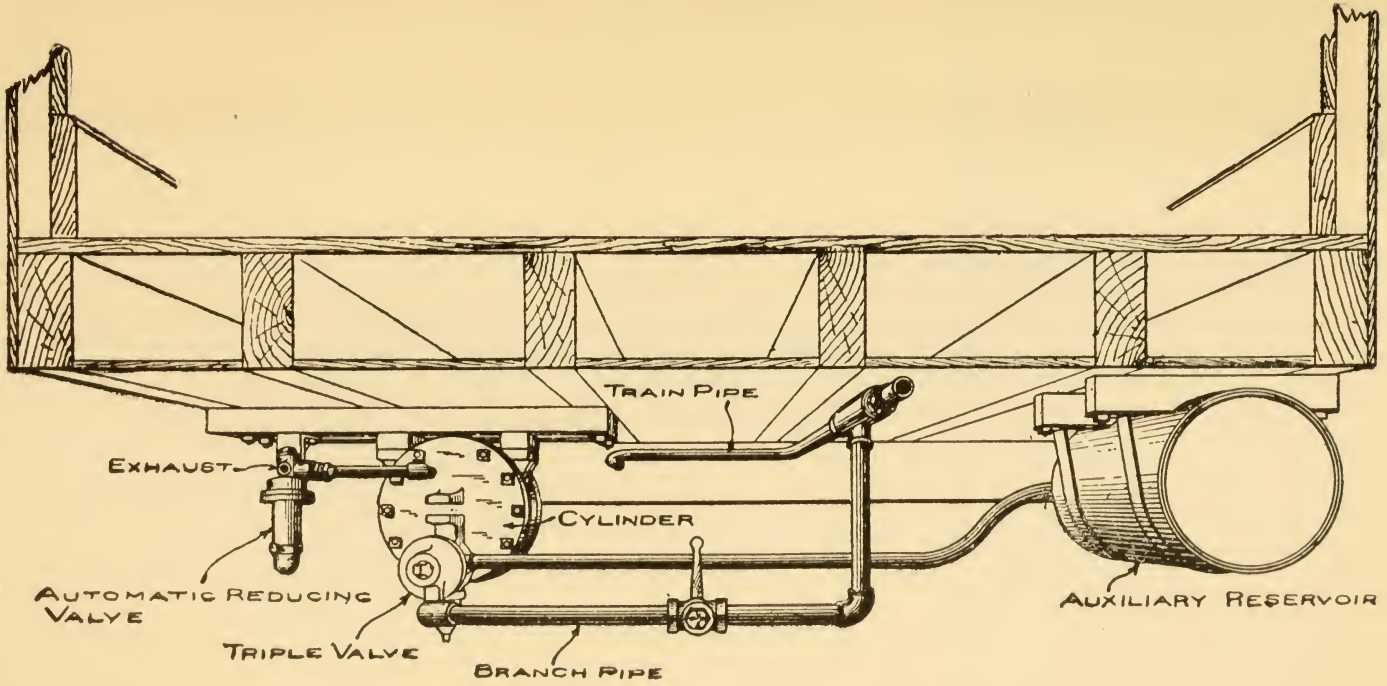

AUTOMATIC REDUCING VALVE APPLIED TO A CAR.

Cars not equipped with the Automatic Reducing Valve should not be attached to trains employing the High-Speed Brake, unless the brake cylinders are equipped with the safety valve provided for temporary use in such cases. The Safety Valve (illustrated on Plate 31) has been especially designed to prevent a higher than standard pressure in the brake cylinders of cars not equipped with the Automatic Reducing Valve; it may be quickly screwed into the oiling hole of the brake-cylinder head, and removed when the cars are again placed in ordinary service.

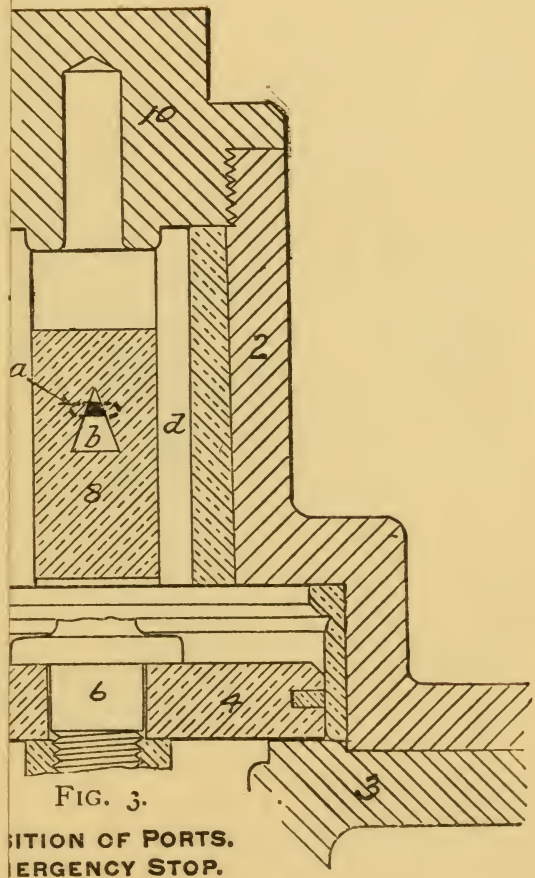

FIG. 3.

ITION OF PORTS.
ERGENCY STOP.

PLATE 30.

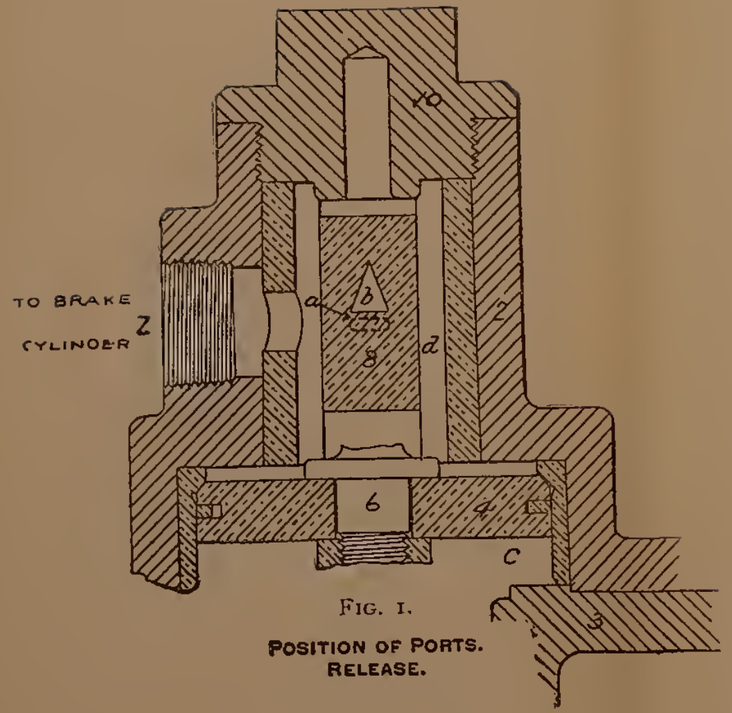

FIG. 1.

POSITION OF PORTS.
RELEASE.

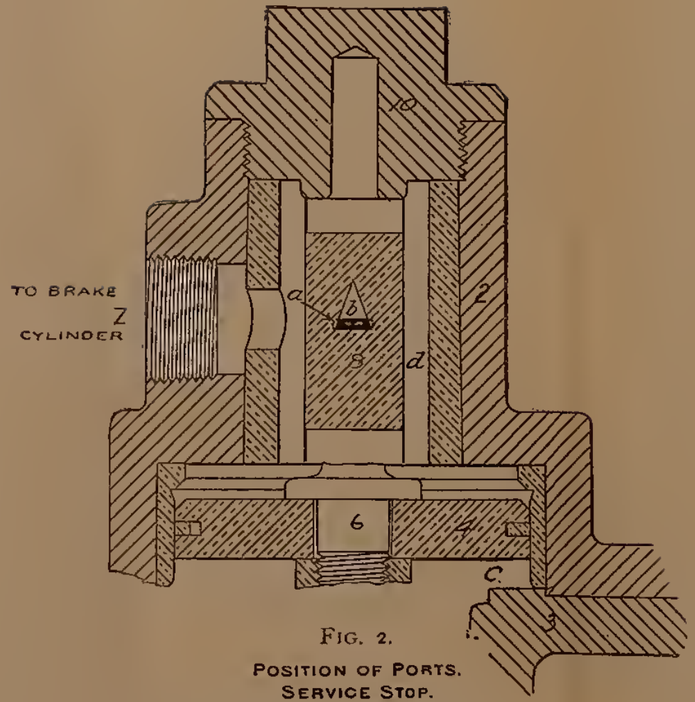

FIG. 2.

POSITION OF PORTS.
SERVICE STOP.
PRESSURE EXCEEDING 60 POUNDS
IN BRAKE CYLINDER.

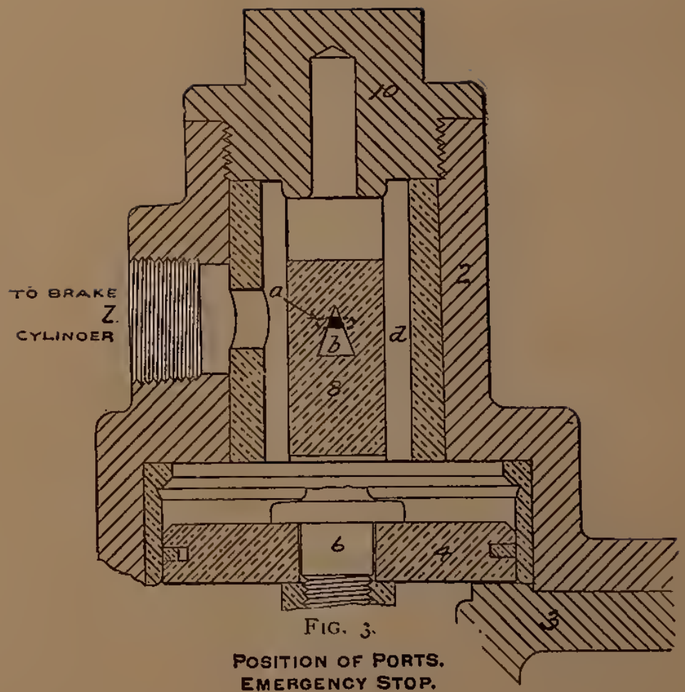

FIG. 3.

POSITION OF PORTS.
EMERGENCY STOP.

PLATE 31.

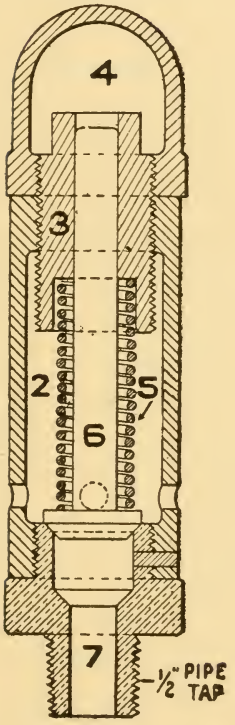

SAFETY VALVE.

High-Pressure Control, or Schedule U.

The High-Pressure Control Equipment is illustrated on Plate 32. It consists of simple appliances, by means of which the engineer can change the trainpipe and main-reservoir pressures from one predetermined standard to another, at will.

This equipment is particularly adapted for use upon heavy grades, where "empties" are hauled up the grades and "loads" down, a pressure of 70 pounds being carried in the trainpipe when the cars are empty, but increased to 90 pounds when the cars are loaded. If the high pressure were carried with empty cars in the train, flat wheels would be apt to result; but, when the cars are loaded, the higher braking power is so moderate a proportion of the total weight of the car and its contents that danger of wheel sliding is practically eliminated.

The following table illustrates the different relative conditions, the figures being based upon a braking power of 70 per cent. of the light weight of an ordinary 60,000-pound freight car, when a 70-pound trainpipe pressure is employed. In an emergency application of the brakes, the brake-cylinder pressure is, of course, 60 pounds; while, in a service application, the cylinder pressure is 50 pounds.

KIND OF APPLICATION.	EMPTY OR LOADED.	BRAKING POWER IN PER CENT. OF TOTAL WEIGHT.
Emergency	Empty	70
"	Loaded	22.1 to 23.8
Service	Empty	58.3
"	Loaded	18.4 to 20

This table shows that the braking power is so small a proportion of the weight, when a car is loaded to its full capacity, that, even with a trainpipe pressure of 90 pounds, there is ordinarily no danger of sliding wheels.

The differences between the Schedule U and High-Speed Brake Equipments are as follows: No additional parts are used on the cars with Schedule U; Safety Valves take the place of the Automatic Reducing Valves in the locomotive and tender equipment; Plain Triple Valves are used with both locomotive and tender brakes, and the piping to the Duplex Pump Governor is changed in one particular.

The description of the High-Speed Brake Equipment upon the locomotive applies also to that of the locomotive equipment with the High-Pressure Control Apparatus, except the effect produced by the change in the governor piping, which is as follows: The reversing-cock handle being in the position shown in the diagram, causing the 70-pound feed valve and the 90-pound pump governor to be operative, the entire brake apparatus will operate in the usual manner, except under one condition. Where the pump governor is piped to the brake valve in the usual manner, it cuts off the steam supply to the pump when main-reservoir pressure has attained its ordinary maximum limit; but when it is piped to the chamber in the feed-valve bracket, as is the case when Schedule U is used, main-reservoir pressure is cut off from action upon the diaphragm of the pump governor when the brake-valve handle is in the Lap, Service Application or Emergency Application Position. It thus occurs that, although the main-reservoir pressure is operative upon the 90-pound pump-governor diaphragm in the Running Position of the brake-valve, it is inoperative when the brakes have been applied and

the valve handle has been returned to "lap," and main-reservoir pressure may then be pumped up to the limit established by the high-pressure governor diaphragm. This high main-reservoir pressure insures a prompt release and quick recharging of the brakes upon a long train, and the pump has to operate against the high pressure only during the time that the brakes are applied.

Whenever loaded trains are to descend long, heavy grades, the handle of the reversing cock is turned to its opposite position, thus cutting out the 90-pound governor and the low-pressure feed valve. The trainpipe pressure is then controlled by the high-pressure feed valve. The brakes are then operated in the usual manner ; but, as the trainpipe and auxiliary-reservoir pressures are now 90 pounds, a much more powerful brake application is available if desired.

The purpose of the safety valves connected with the driver and tender brake cylinders is to prevent the accumulation of a higher cylinder pressure than 50 pounds.

Description of the parts of the High-Pressure Control Apparatus, not described under this caption, will be found in other parts of this book.

When carrying a trainpipe pressure of 90 pounds upon freight trains, a trainpipe reduction of about 25 pounds will be necessary to equalize auxiliary-reservoir and brake-cylinder pressures, with the customary average piston travel.

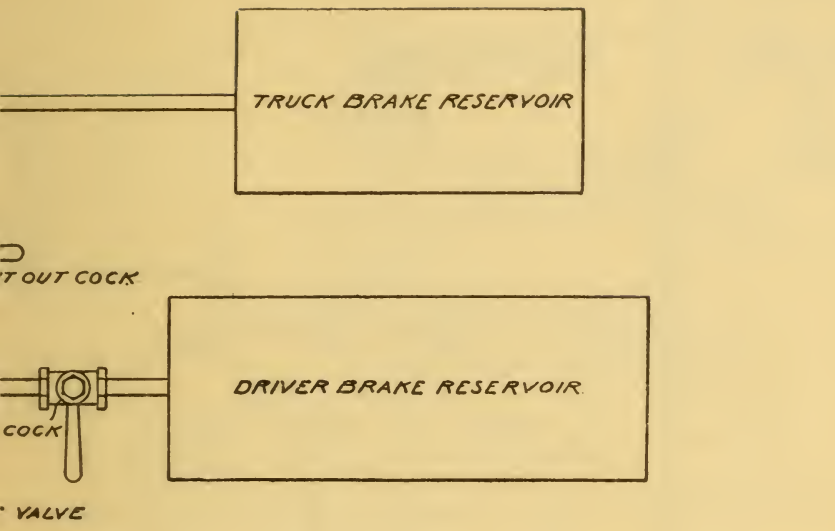
TRUCK BRAKE RESERVOIR
T OUT COCK
DRIVER BRAKE RESERVOIR
COCK
VALVE

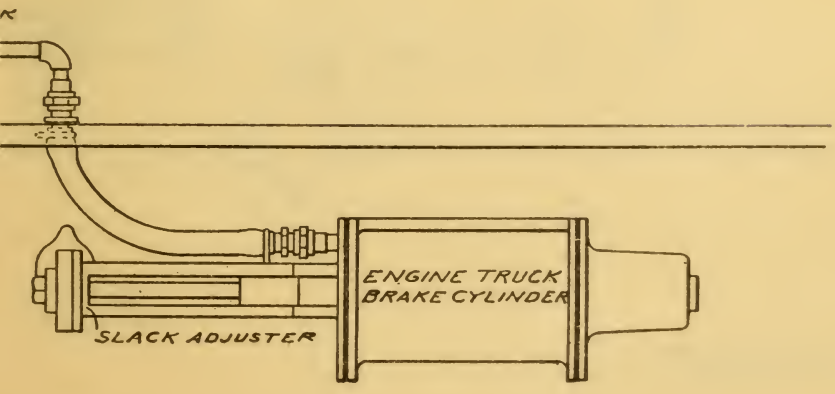
ENGINE TRUCK
BRAKE CYLINDER
SLACK ADJUSTER

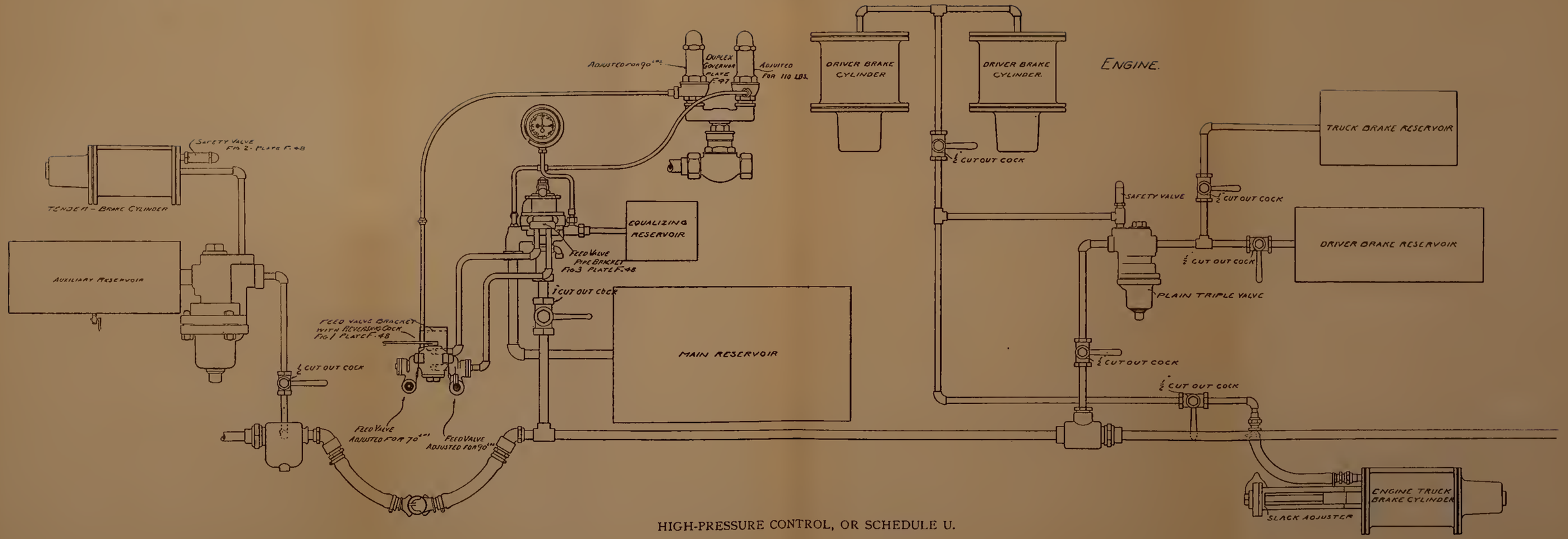

HIGH-PRESSURE CONTROL, OR SCHEDULE U.

Handling Brakes in Train Service.

Very accurate stops of passenger trains should be made with two applications of the brakes. In releasing after the first application, place the brake-valve handle in Release Position just long enough to release the brakes, and then place it on "lap," to avoid overcharging the trainpipe and to secure prompt response of the triple valves in the second application.

Always release the brakes of a passenger train just before it comes to a standstill, to allow the trucks to right themselves: if this rule be observed, disagreeable shock to passengers at stopping will be avoided; if on a heavy grade, reapply the brakes with sufficient force to prevent the train from drifting.

In making stops with a freight train, never release the brakes until the train has come to a standstill: partings of the train are thus avoided.

The best way to take water on a locomotive hauling a freight train is to stop short of the water plug, cut off, and run up with the locomotive alone.

In setting out cars, always leave the brakes applied on the train when leaving it ; then, after recoupling, the train cannot be started if the angle cocks have not been opened.

Before starting, insist upon a test of the brakes and upon knowing the number of cars, the number of air brakes in good order and the train tonnage, and get all the general information concerning the train conditions that can be obtained.

In order to avoid failure of the brakes to release, always couple the locomotive to an empty or partially charged train with a reduced trainpipe pressure on the locomotive.

If a train pulls hard, do not conclude that the brakes

are necessarily at fault, and keep trying to "kick" them off by repeatedly moving the brake-valve handle into the Release Position. If thereby trainpipe pressure become greater than that for which the feed valve is adjusted, any subsequent trainpipe leakage will cause the brakes to "creep" on, and, in a hard pull, this may result in "stalling."

Never open the locomotive throttle immediately after releasing the brakes upon a freight train; parting of the train may be the result: allow the train slack to adjust itself before applying steam.

The use of the emergency application on turntables is objectionable, as it causes severe strains therein; use two applications of the brakes instead, or a little steam if stopping a trifle too soon. This suggestion also applies to water-crane stops with a locomotive.

A heavy, initial application of the brakes has become the successful practice in making stops with fast passenger trains, and also with loaded freight trains upon heavy grades.

Apply the brakes as soon as the train passes a summit, to ascertain what they are capable of doing; do not wait until the train attains maximum schedule speed before making an application: the latter practice is sometimes the cause of runaways, and gives the brakemen a poor opportunity to stop the train by hand, if necessary.

The man who appreciates the fact that he has an insufficient number of air brakes in good order to control a train and calls for the aid of some hand brakes, is a safer man for a railroad company than the one who calls for no aid, through fear that the trainmen will think "he has lost his nerve."

When hand brakes are necessary in addition to the

air brakes in use, first apply those on the cars with the air brakes cut out, if practicable, and then those on the cars immediately back of the air-braked cars.

It is wrong to think that the full power of the air brake is available upon cars upon which the hand brakes have already been applied, in case it is necessary to stop: this practice is sometimes a costly one.

In descending a grade, always aim to keep the train-pipe pressure as near the standard as possible; this is accomplished by recharging as frequently as may be necessary for the purpose: this practice gives greater security, if occasion demands that a stop be made.

Where pressure-retaining valves are used, make a practice of using them all, either in passeng eror freight service, unless the train will run at too slow a speed with all of them in use.

Always use Release Position of the brake valve to release brakes, regardless of the length of the train; this practice reduces to a minimum the number of flat and broken wheels resulting from failure of brakes to release.

In descending heavy grades with freight trains, always recharge in Release Position. If it appears that the train-pipe pressure will be too high before it is necessary to again use the brakes, return the valve handle to Running Position when the standard pressure has been obtained. In case the valve handle is so returned to Running Position with a long train, allow it to remain there a few seconds, then move it to Release Position for an instant, and return it to Running Position: this is to secure the release of any brakes that may have applied to the forward cars, through the tendency, upon long trains, of the auxiliary reservoirs at the forward end of the train to charge a trifle faster than

those at the rear. When the brake-valve handle is first returned to Running Position, the equalization of pressure throughout the trainpipe tends to cause brakes at the forward end to apply lightly.

In service applications, a twenty-pound trainpipe reduction, or twenty-five at the utmost, is sufficient to fully apply the brakes ; any further reduction is simply a waste and loss of trainpipe air.

In using sand, get it upon the rail before the speed of the train has been so reduced that wheels are likely to slide; if sand be used while wheels are sliding, bad flat spots are produced, since the application of sand will not cause sliding wheels to revolve.

Remember that the driver and tender brakes, in good condition, will hold considerably more than reversing the engine, and that flat tires result if the engine be reversed when the driver brakes are already applied.

Keep driver and tender brakes in good order; for, on the heavy classes of freight engines, these two brakes furnish as much braking power as from five to seven 60,000-pound-capacity cars having a light weight of 30,000 pounds.

Watch the air gauge as closely as possible.

Trainpipes that are practically tight, those that have considerable leakage, and those that leak comparatively slightly are found in freight service. Where considerable leakage exists, its influence upon brake applications at once attracts attention to its existence ; where the leakage is comparatively slight, however, it is an element of serious danger upon grades, unless the air gauge is frequently observed. The brakes having been applied by a moderate trainpipe reduction, the leakage increases the force of application ; and it would be a serious situation if a stop from schedule speed were required after the trainpipe and

auxiliary-reservoir pressure has become reduced to 50 pounds.

Remember, when stopping a freight train, that poor judgment may cause considerable damage to cars and lading.

If the brakes apply suddenly, without apparent cause, "lap" your brake valve immediately in order to save the main-reservoir air and to have sufficient pressure with which to release the brakes and recharge the auxiliary reservoirs: probably a hose has burst or a conductor's valve has been opened.

In a case of parting between air-braked cars of a partially equipped train, close the throttle and do not try to pull away, or the head end will only be hit the harder. You cannot pull a train with the brakes applied, and the cars at the rear, not equipped with air brakes, are bound to force the rear into the forward section of the train.

Trying to release the brakes by placing the brake valve in Running Position is the cause of many flat and broken wheels. In this position of the brake valve, trainpipe pressure rises comparatively slowly; and, if there be any poorly fitting triple-valve-piston packing rings, the trainpipe air may feed past such pistons and recharge the auxiliary reservoirs without forcing the pistons to release position. The wheels of such cars may catch and slide upon a poor rail when the train is moving slowly ; or the brakes, if applied for a considerable time, may heat the wheels sufficiently to cause breakage.

Always make a running test with passenger trains after leaving terminals or where engines have been changed. A running test is also conducive to the safety of freight trains, if a suitable place can be found for such purpose.

Hand brakes should be used at the rear of a train par

tially equipped with air brakes, when backing; also to hold slack when portions of the train are standing on each side of a knoll.

Applying hand brakes upon rear cars, to avoid shock in the caboose when the air brakes are applied upon the head end of a train partially equipped with air brakes, often produces the opposite effect, since the few hand brakes only serve to stretch out the train, so that there is more slack to run in and cause increased shock.

In actual cases of emergency, place the brake-valve handle in Emergency Application Position and permit it to remain there until the train has come to a standstill, or, if a passenger train, until the danger has been removed.

The shorter the train, the shorter will be the discharge at the trainpipe exhaust port, in response to a given reduction of pressure in the equalizing reservoir; this knowledge should indicate to the engineer whether the angle cocks are open between the tender and cars.

Piping.

In piping cars, the following points should always be borne in mind : No deviation should ever be made from the sizes of pipe specified in our current Catalogue ; red lead, if used at all, should be applied sparingly, and never inside of fittings ; fins should always be removed from pipe before it is installed ; pipe should never be installed without first being blown out by steam or air, and the pipe should be jarred while being blown out, in order to help loosen scale ; long, easy bends should be substituted for ells and sharp bends, wherever possible ; all pipe joints should be tested under pressure with soapsuds to detect leaks ; if there is to be any inclination of the pipe on a car, the highest point should be at the center of the car, and sags in the pipe, forming pockets where moisture may collect, must be avoided ; all pipe should be securely clamped to the car to avoid vibration, which eventually produces leaks ; special care should be given to the M. C. B. recommendations concerning the location of the angle cock, in order that the hose shall couple properly with foreign cars ; and the angle-cock key should clear the nearest part of the car by at least one inch.

Lubricants.

The following is a list of the lubricants that have proved most satisfactory in the different parts of the brake system :

Steam Cylinder of Pump—Valve Oil.

Air Cylinder of Pump—Valve Oil.

Brake Valve—High-grade Machine Oil.

Triple Valve—High-grade Engine Oil.

Brake Cylinder—a light grease that will not flow in summer or become thick in winter.

Brake Inspection and Maintenance.

Car Inspectors, especially those who do work upon air-brake apparatus, should have a thorough understanding of its operation, in order to make tests and repairs intelligently, to recognize defects quickly and to use defect cards properly.

Special care should be exercised to reduce leaks to a minimum. Paper should never be used for the purpose of stopping leaks in hose couplings, nor should the flanges on hose couplings be hammered or bent : this practice sometimes gives temporary relief, but the standard is destroyed. Couplings are often found that will not couple with others ; if they be finally forced together and the train breaks in two at this point or a switch is made without uncoupling the hose, the chances are that either the hose or the trainpipe, or both, will be torn off.

In testing trains with air plants or with a locomotive, the following method is commended : After the hose couplings are all united and all angle cocks have been opened, the air should be turned into the trainpipe. When ample time has elapsed to insure a sufficient trainpipe pressure, the train should be examined and all leaks stopped. This should be given special attention. The brakes should then be applied, the piston travel adjusted, where necessary, and any defective brakes repaired or carded, according to the rules of the road.

If the grades be sufficiently heavy to warrant a retaining-valve test, the handles of these valves should be turned up before the brakes are released. The retaining-valve handles should not be turned down until about a minute after trainpipe pressure has been raised sufficiently to cause the triple-valve piston to move to release position. If a discharge of air does not accompany the turning down of

the retaining-valve handle, the retaining valve should be repaired or the defect carded. The apparent fault of the retaining valve in not holding the air properly may, however, be due to a loose pipe joint between the triple valve and the retaining valve or to a leaky cylinder packing leather.

In adjusting piston travel, inspectors should be governed largely by what is said concerning that subject on other pages of this book.

After the inspection has been completed, in any case where the locomotive about to take the train has been used in making the test, the engineer and conductor should be informed regarding the number of cars in the train, the number of air brakes working properly and the number of retaining valves in working condition, and should also be given any additional information of a general character that will aid the engineer in the successful manipulation of the brakes.

Cleaning and Oiling the Triple Valve and Brake Cylinder.

The following points, if borne in mind, will be of service in cleaning and oiling triple valves and brake cylinders:

Tools that will facilitate the work are the following: A monkey wrench; a hammer and chisel; a Stillson wrench; a cotter-pin drift; a lever-pin drift; a combination open-end S wrench that will fit triple-valve nuts and cap screws, cylinder nuts, and the nut on the clamp made to go over the piston sleeve to keep the release spring in compression when the piston is removed; a double-end wrench, one end of which will take the drain-cup union, the other to be used in renewing hose; a can of kerosene; a small sharp-pointed piece of hard wood; an oil or grease

can ; a squirt can ; hose and union gaskets ; a pair of plyers ; waste ; an old piece of chamois or of some cloth ; and a suitable box in which to carry the tools.

The order of work found to be the most satisfactory is to first take the triple valve apart and immerse the removable internal metal parts in kerosene, leaving them there until the work upon the cylinder is completed ; next remove the push rod and, if a freight cylinder, put a clamp upon the piston sleeve ; remove the cylinder head and piston ; clean and oil the cylinder ; and then replace the parts in the reverse order. The parts of the triple valve should then be thoroughly cleaned and replaced, after which the strainer should be cleaned, the brake tested, the piston travel adjusted, the retaining valve tested (and repaired if necessary), and, finally, the cylinder should be stencilled to show the date of cleaning and oiling. The pipe joints should be tested under pressure with soapsuds. The nuts upon the bolts which support the cylinder should always be examined, and tightened, if loose ; if they are loose, the movement of the cylinder, when the brakes are applied, produces leaks in the pipe joints.

In cleaning the cylinder and piston, special attention should be given to removing lint, freeing the leakage groove of any deposit, and thorough cleansing of the expander ring, packing leather, and piston. In oiling or greasing the cylinder, special attention should be given to the thorough lubrication of the top of the cylinder and the inside of the packing leather where the expander ring rests. A light grease in the cylinders has been found to give the best results. If too much oil be used, it will work back into the triple valve and ruin the rubber-seated valve and the gasket. It should be particularly observed that the follower nuts are tight, since they are frequently found to be loose.

In cleaning the triple valve, special care should be given to the slide valve, the graduating valve, the slide-valve seat, the packing ring of the triple-valve piston, and the emergency rubber-seated valve. In order to avoid springing the triple-valve-piston packing ring, it should never be removed except for the purpose of renewal. Cloth should be used on the triple-valve parts, and a final application of the chamois will remove the possibility of trouble from lint. The triple-valve-piston packing ring should be caused to work freely in its groove before replacing.

Seven or eight drops of oil are sufficient for lubricating the entire triple valve, as none should be used on the quick-action parts. The slide valve, its seat, the triple-valve-piston packing ring, and the bushing in which it works should receive special consideration in respect to sufficient lubrication, and care should be taken not to permit any oil to get upon the gaskets or rubber-seated valve.

The graduating and check-valve springs should be examined and renewed if they have a material permanent set.

In making yard or shop tests, it is advisable, wherever possible, to have an engineer's brake valve with which to apply and release the brakes; and the triple valves should be subjected to a test that will detect any badly worn triple-valve-piston packing rings.

Foundation Brake Gear.

To insure a sufficiently strong, durable and substantial brake gear, the sizes of rods, levers, and pins recommended by the Master Car Builders' Association should be strictly followed.

It is important that the rods should be parallel with a longitudinal line through the center of the car when the brakes are applied.

Brake beams should be so hung that the centers of the brake shoes shall be at the standard distance above the rail, as prescribed by the Master Car Builders' Association ; and, wherever possible, the brake beams should be so hung that, whether the car be light or loaded, they shall always be at the same distance above the rail. This practice greatly reduces the liability of flat wheels, since the piston travel is not affected by the loading or unloading of the car and may therefore be properly adjusted whether the car be light or loaded.

It is always best to so design the hand and air brakes that they shall "work together;" that is, so that all the levers move in the same direction when the brakes are applied by hand as when applied by air. Where they "work opposite," or where hand power pulls against air power, only one can be successfully used at a time, which is very inconvenient where the air brake is applied upon cars that are to stand for some time on a grade, since the hand brakes cannot be applied until the air brakes have been released. Many other objections to such an arrangement occur in road practice, and brakes that "work together" are much to be preferred, from the standpoints of both practicability and safety.

In securing brake cylinders to car bodies, an iron plate is much to be preferred to wooden blocks, since the latter

shrink, thus loosening the bolts and permitting movement of the cylinder every time the brakes are applied. This movement of the cylinder is imparted to the train-pipe and is a very productive source of leaks.

Triple valves should be so located as to be easy of access for cleaning or repairing.

Levers should stand approximately at right angles to the rods when the brakes are applied.

Fig. 1, Plate 33, illustrates the Hodge system of leverage ; Fig. 2 is the Stevens ; and Fig. 3 is the recommended design for tenders. The usual form of brake gear applied to freight cars is illustrated on Plate 35 under the subject of "Leverage."

The following percentages of their light weights are the usual braking powers for the different vehicles of trains :

Passenger Cars, 90 per cent. ;

Freight Cars, 70 per cent. ;

Tenders, 100 per cent. ;

Driver Brakes, 75 per cent. (of weight upon drivers, as the locomotive stands ready for service) ;

Truck Brakes, 75 per cent. (of weight upon the truck).

Slight modifications of this general practice are sometimes desirable, to meet special conditions.

L. of C.

PLATE 33.

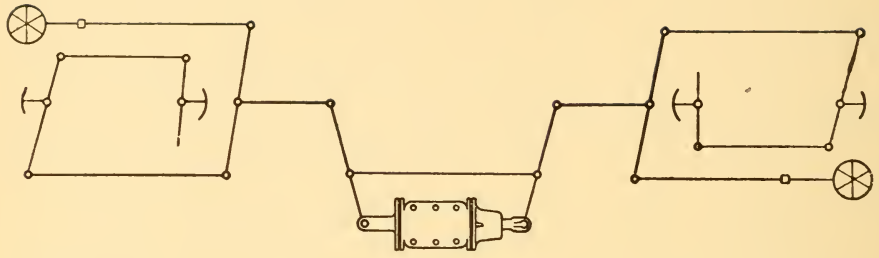

FIG. 1.

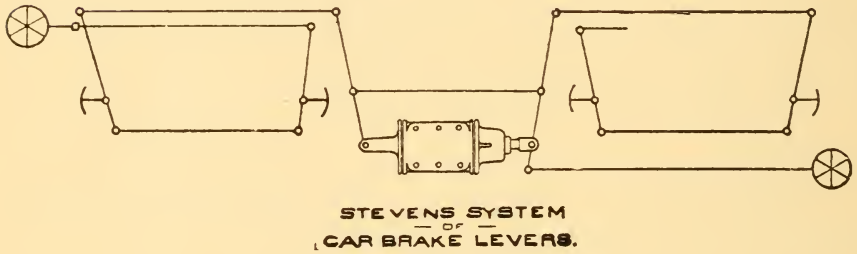

FIG. 2.

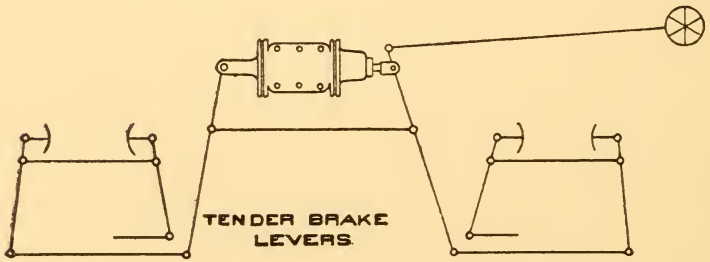

FIG. 3.

Leverage.

In every calculation required to determine the proper proportions of brake levers, or to determine the forces operating upon different pins, two forces and two distances are involved: one force is that which may be regarded as applied at one of the three pins, and the other force is regarded as that delivered at another of the pins, while the remaining pin becomes the "fulcrum"; the two distances involved are those between the fulcrum pin and the pins at which the two forces are applied and delivered, respectively. In every case, the product of the force applied at one pin and its distance from the fulcrum pin is equal to the product of the force delivered at the other pin and its distance from the fulcrum pin. If the applied force be designated by F and its distance from the fulcrum pin by a, and if the delivered force be designated by W and its distance from the fulcrum pin by b, then $F \times a = W \times b$. When the applied force F and the distances a and b are all known, the delivered force $W = \frac{F \times a}{b}$. If the force W, which must be delivered, and the two distances a and b are known, the force that must be applied is $F = \frac{W \times b}{a}$. Similarly, if both the applied force F and the force W that must be delivered are known, together with the distance of one of the forces from the fulcrum pin, the other distance is $a = \frac{W \times b}{F}$, where b is the known distance, or $b = \frac{F \times a}{W}$, where a is the known distance.

It is to be understood, of course, that if a force is operative at any one of the three pins, forces must also be operative at both of the other two pins; but the force acting at the fulcrum pin does not require consideration in

determining the relation between the forces acting at the other two pins. The force at any one of the three pins may, in such calculations, be regarded as the applied force, and that at either of the other two may be treated as the delivered force, the remaining pin becoming the fulcrum in that case.

There thus appear to be three different sets of conditions, depending upon the relative position of the fulcrum pin ; but the same rules and formulæ apply to each. The three cases are illustrated, as applied to the truck brake lever, on Plate 34. In each of the three cases, the formulæ for determining the applied and delivered forces and their distances from the fulcrum pin are given, and it will be observed that the formulæ are precisely the same in all three cases, except as affected by the following considerations.

It sometimes occurs that, when the middle pin is the fulcrum pin, the applied and delivered forces at the end pins are given, but the only distance known is that between the end pins. In that case, neither distance a nor b, but only their sum, is known. In such a case, it is necessary to proceed as follows : Let the length of the lever—or the distance between the end pins—be represented by l. Then, since the middle pin is the fulcrum, $l = a + b$, so that $a = l - b$ and $b = l - a$. Substituting these values of a and b in the equations $a = \frac{W \times b}{F}$ and $b = \frac{F \times a}{W}$, respectively, it is found that $a = \frac{W \times l}{F + W}$ and $b = \frac{F \times l}{F + W}$. The values of a and b having been obtained by these formulæ, the correctness of the computations may always be checked, since the sum of the computed values of a and b must equal l.

PLATE 34.

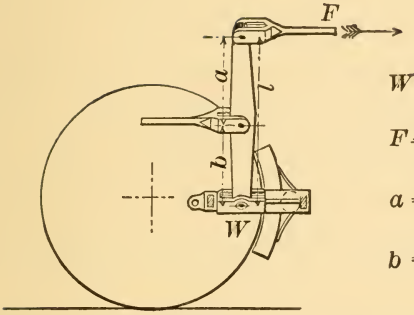

$$W = \frac{F \times a}{b}$$

$$F = \frac{W \times b}{a}$$

$$a = \frac{W \times b}{F} \text{ or } a = \frac{W \times l}{F + W}$$

$$b = \frac{F \times a}{W} \text{ or } b = \frac{F \times l}{F + W}$$

FULCRUM BETWEEN APPLIED AND DELIVERED FORCES.

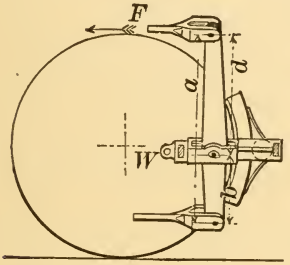

$$W = \frac{F \times a}{b}$$

$$F = \frac{W \times b}{a}$$

$$a = \frac{W \times b}{F} \text{ or } a = \frac{W \times d}{W - F}$$

$$b = \frac{F \times a}{W} \text{ or } b = \frac{F \times d}{W - F}$$

DELIVERED FORCE BETWEEN FULCRUM AND APPLIED FORCE.

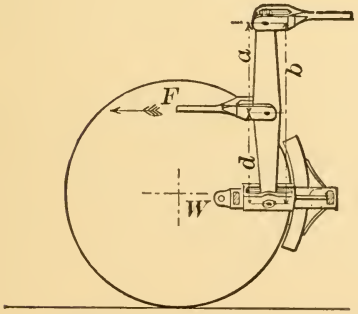

$$W = \frac{F \times a}{b}$$

$$F = \frac{W \times b}{a}$$

$$a = \frac{W \times b}{F} \text{ or } a = \frac{W \times d}{F - W}$$

$$b = \frac{F \times a}{W} \text{ or } b = \frac{F \times d}{F - W}$$

APPLIED FORCE BETWEEN FULCRUM AND DELIVERED FORCE.

It sometimes also may occur that both the applied force F at one pin and the force W that must be delivered at another pin are known, but the only additional information is the difference between the distances a and b, the fulcrum being an end pin. Let d represent the difference between the distances a and b. Two cases arise. In one case, a is greater than b by d inches. Then $a = b + d$ and $b = a - d$. Substituting these values of a and b in the equations $a = \frac{W \times b}{F}$ and $b = \frac{F \times a}{W}$, respectively, it will be found that $a = \frac{W \times d}{W - F}$ and $b = \frac{F \times d}{W - F}$. The check is that the calculated value of a must be equal to the sum of d and the calculated value of b.

In the other case, a is less than b by d inches. Then $a = b - d$ and $b = a + d$; and, in a similar manner, it is found that $a = \frac{W \times d}{F - W}$ and $b = \frac{F \times d}{F - W}$. The check is that the calculated value of a must be equal to the calculated value of b less d inches.

The force acting at the middle pin of a straight lever is always equal to the sum of the forces acting at the other two pins, and this fact furnishes the means of checking the correctness of calculated forces.

It is of the utmost importance that the same units of force and distance be preserved throughout calculations, all forces being preferably expressed in pounds and all distances in inches. It is equally important to remember that each reference to the distance between pins invariably means the distance from center to center of pins or of pin holes.

The following practical example will illustrate the method of employing the formulæ above given. It is re-

quired to apply the air brake to a freight car weighing 34,286 pounds. The general construction of the brake gear is to be as shown on Plate 35. The live truck lever is 30 inches long, is secured to the brake beam at the lower end and inclines at such an angle (40 degrees from the vertical) that the upper end is 19 inches from the center line of the car. The middle hole in the lever, for securing the strut connection to the dead lever, is 6 inches from the lower hole, and is consequently 24 inches from the upper hole.

As the car weighs 34,286 pounds and the proper emergency braking power is 70 per cent. of the light weight, the pressure from the four brake beams upon the wheels must be 24,000 pounds, or 6,000 pounds per beam. The delivered force (W) at the lower end of the live lever must therefore be 6,000 pounds; the middle pin is the fulcrum; the distance (b) from the fulcrum to the delivered force is 6 inches, and the distance (a) from the fulcrum to the applied force (F) at the upper pin is 24 inches. Substituting these values of W, a and b in the formula $F = \frac{W \times b}{a}$, the force that must be applied at the upper pin by the upper rod is $F = \frac{6{,}000 \times 6}{24} = 1{,}500$ pounds.

To find the force delivered by the live lever, through the strut connection, to the dead lever, the lower pin becomes the fulcrum, 1,500 pounds is the applied force (F) at the upper pin, 30 inches (a) from the fulcrum, and the delivered force (W) is 6 inches (b) from the fulcrum. Therefore, $W = \frac{F \times a}{b} = \frac{1{,}500 \times 30}{6} = 7{,}500$ pounds. The correctness of this result is checked by adding the forces (1,500 pounds and 6,000 pounds) acting at the upper and lower pins, respectively, which must equal the force at the middle pin.

PLATE 35.

Weight of Car, 34,286 pounds ; Braking Power, 24,000 pounds, or 70 per cent.

With the Quick-Action Triple Valve, E indicates forces in Emergency Applications and S indicates forces in Full Service Applications ; with the Plain Triple Valve, S indicates the forces in either Full Service or Emergency Applications.

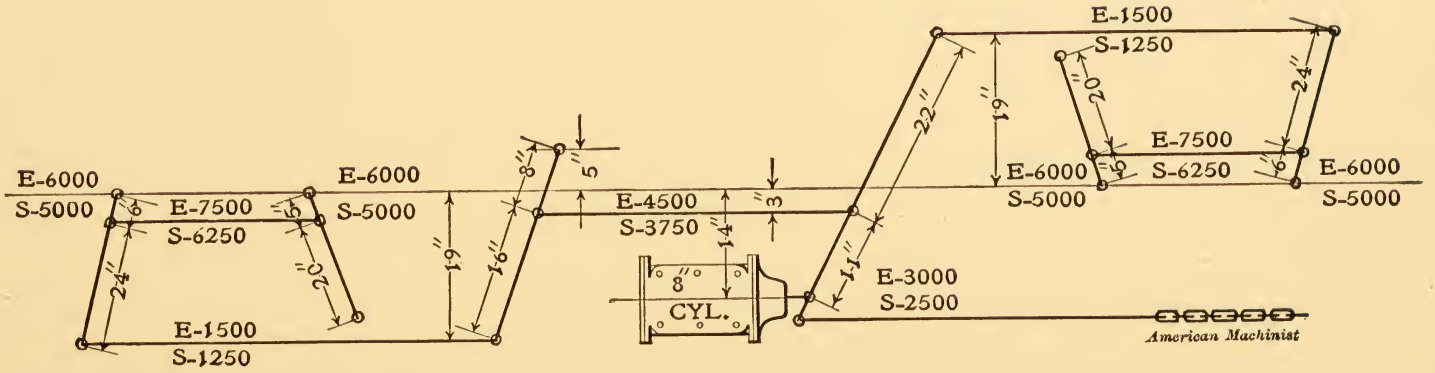

All Distances of Rods from Center Line of Car Body are those that should occur when the Levers stand at Right Angles to it.

The force applied to the middle pin of the dead lever is thus found to be 7,500 pounds. In order that it may clear the upper rod, the dead lever is made but 25 inches long. The upper pin is the fulcrum and a force of 6,000 pounds must be delivered to the brake beam at the lower pin, 25 inches from the fulcrum, by means of the force of 7,500 pounds applied at the middle pin; that is, $F = 7{,}500$, $W = 6{,}000$, and $b = 25$. Therefore, $a = \frac{W \times b}{F} = \frac{6{,}000 \times 25}{7{,}500} = 20$ inches. The middle pin must thus be 20 inches from the upper pin and 5 inches above the lower pin in the dead lever. It should be observed that the lower end of the dead lever is, in the case under consideration, one-fourth the length of the upper end, just as is the case with the live lever ; and it is a very important fact to remember that, in order to obtain the same brake-shoe pressure upon each pair of wheels of the truck, the dead lever must always be proportioned precisely the same as the live lever, though its length may be different. Conversely, if the live and dead levers are proportioned alike, the brake-shoe pressure is the same upon both pairs of wheels.

As the trucks are alike, the above calculations apply to each, and it is now only necessary to remember that 1,500 pounds must be applied at the upper pin of the live lever of each truck, at a distance of 19 inches from the center line of the car. The upper rods should be parallel with the center line of the car when the cylinder and floating levers are at right angles to them, so that a force of 1,500 pounds must be delivered at the pins connecting the upper rods with the cylinder and floating levers, at a distance of 19 inches from the center line of the car. (In the release position, as indicated on Plate 35, these distances

from the center line would be somewhat less, so that the diagram is not strictly correct in this respect.)

The positions of truss rods, etc., make it most convenient to so locate the brake cylinder that the center line, or axis, of the cylinder is 14 inches from the center line of the car. The length of the cylinder lever thus becomes determined by the sum of 19 and 14 inches, and is 33 inches. The cylinder being 8 inches in diameter, the emergency air pressure upon the piston is 3,000 pounds, which is the force (F) applied at the pin at one end of the cylinder lever, while the delivered force (W) at the pin at the other end must be 1,500 pounds, the middle pin being the fulcrum, and the length (l) of the lever is 33 inches. Neither a nor b is known; but, from the formula for such a case, $a = \frac{W \times l}{F + W} = \frac{1,500 \times 33}{3,000 + 1,500} = 11$ inches. Similarly, $b = \frac{F \times l}{F + W} = \frac{3,000 \times 33}{3,000 + 1,500} = 22$ inches. The check upon these calculations is that the sum of a and b (11 and 22) equals l, or 33 inches.

To find the force delivered by the cylinder lever to the connecting rod, and thereby to the floating lever, the upper-rod pin becomes the fulcrum, $a = 33$ inches, $b = 22$ inches and $F = 3,000$ pounds. Therefore, $W = \frac{3,000 \times 33}{22} =$ 4,500 pounds, which checks, as the sum of 3,000 and 1,500.

The connecting rod between the cylinder and floating levers should be parallel with the center line of the car. As it is 11 inches from the axis of the cylinder, which is 14 inches from the center line of the car, the connecting rod, and therefore the middle pin of the floating lever, should be 3 inches from the center line of the car. As already found, the upper rod and its pin in the floating lever should

be 19 inches from the center line of the car, so that the distance between that pin and the middle pin of the floating lever must be 16 inches. It remains to determine the position of the fulcrum pin at the other end of the floating lever. The force (F) applied at the middle pin is 4,500 pounds, and the force (W) that must be delivered at the upper-rod pin is 1,500 pounds. We do not know either distance a or b; but we know that a is 16 inches less than b. Making $d = 16$ in the formulæ for this case, $a = \frac{W \times d}{F - W} = \frac{1{,}500 \times 16}{4{,}500 - 1{,}500} = 8$ inches, and $b = \frac{F \times d}{F - W} = \frac{4{,}500 \times 16}{4{,}500 - 1{,}500} = 24$ inches. These results check properly, as $24 - 16 = 8$. The fulcrum pin must therefore be located $8 - 3 = 5$ inches from the center line of the car body.

It will be observed here, also, that the short end of the floating lever is one-half the length of the long end, the same as with the cylinder lever; and it is invariably necessary, in order that the same force shall be delivered to both upper rods, that the cylinder and floating levers shall be proportioned exactly alike, though their lengths may be quite different. Conversely, also, if the cylinder and floating levers are proportioned alike, the same force is exerted upon both upper rods.

This completes the calculations for the entire brake gear, from the brake cylinder to each brake beam, and the example has included every kind of brake-lever computation that can arise in determining the proportions of straight brake levers.

If the same car were already equipped with the air brake and it be desired to ascertain the braking power, we should pursue the reverse course. Starting with the known emergency piston pressure of 3,000 pounds as the applied

force (F) at the end pin of the cylinder lever, the middle pin is the fulcrum, $a = 11$ and $b = 22$. Therefore, $W = \frac{F \times a}{b} = \frac{3{,}000 \times 11}{22} = 1{,}500$ pounds, delivered to the upper rod.

Since the floating lever is found to have the same proportions as the cylinder lever, we know, without further calculation, that a force of 1,500 pounds is also delivered by the floating lever to the other upper rod. If the floating lever were found to be of materially different proportions from those of the cylinder lever, we should first find the force delivered at the middle pin of the cylinder lever, by considering the upper-rod pin as the fulcrum, checking the result by adding the forces at the end pins. Then, with this force as the applied force at the middle pin of the floating lever, we should find the force delivered to its upper rod by the floating lever. It would then be necessary to continue the calculations through to the brake beams of the truck at that end of the car. As it is, knowing that 1,500 pounds is the force (F) applied to the upper pin of each live truck lever, we have only to trace the forces through one truck.

The applied force (F) at the upper pin of the live truck lever is 1,500 pounds and the middle pin is the fulcrum, so that, in determining the force (W) delivered to the brake beam, $a = 24$ and $b = 6$. Therefore, $W = \frac{F \times a}{b} = \frac{1{,}500 \times 24}{6} = 6{,}000$ pounds, which is the force applied to the brake beam.

As the dead lever is proportioned exactly like the live lever, we know, without further calculation, that the same force—6,000 pounds—is applied to each brake beam, and

the total braking power of the car is 6,000 × 4, or 24,000 pounds, which, divided by the weight of the car (34,286 pounds), is .70—the per cent. braking power.

If the dead lever were proportioned materially differently from the live lever, it would be necessary to regard the lower pin of the live lever as the fulcrum and to first find the force delivered at the middle pin, checking the result by adding the forces at the upper and lower pins, which sum it must equal. With this force applied at the middle pin of the dead lever, and with the upper pin as the fulcrum, we should then find the force delivered to the brake beam at the lower pin. The sum of the forces found to be applied to the four different brake beams would then be the braking power upon the car.

The forces above calculated, and shown upon the diagram of Plate 35, represent an emergency application and are designated by the letter E. In a full service application, the air pressure upon the piston of the 8-inch brake cylinder is but 2,500 pounds, and the forces thereby developed throughout the brake gear are designated upon the same diagram by the letter S. The calculation of these forces is left as an exercise for the interested reader. It may be observed, also, that, where the plain triple valve is employed, the forces designated by the letter S occur in emergency as well as in full service applications.

The foregoing example illustrates the method of calculating the braking power developed by any system of straight levers employed in locomotive driver, locomotive truck, tender or car brakes, excepting only the cam driver brake. If the brake gear includes other levers in addition to those of the example illustrated on Plate 35, the same methods and formulae are applicable in the extended calculations.

A short method of calculating the braking power developed by an American Equalized Driver Brake, of the construction shown on Plate 36, is to multiply the total force exerted upon the piston (as indicated, for an air pressure of 50 pounds, in the table below) by the length of the long lever arm, divide this product by the length of the short arm, and multiply the result by two.

In calculating the braking power upon locomotive drivers, locomotive trucks, tenders, passenger cars and freight cars, the force exerted upon the piston depends upon the size of the cylinder and the air pressure in the cylinder. Where the plain triple valve is used, the air pressure is regarded as 50 pounds per square inch, while, with a quick-action triple valve, 60 pounds per square inch is regarded as the cylinder pressure. The following table gives the forces exerted upon the pistons of the different sized cylinders with pressures of 50 and 60 pounds per square inch :

Size of Cylinder,	16″	14″	12″	10″	8″	6″
50 pounds pressure,	10050	7700	5650	4000	2500	1400
60 pounds pressure,	12050	9200	6700	4700	3000	1700

Auxiliary Reservoirs Used With Different Sizes of Brake Cylinders.

10″ x 24″ Auxiliary Reservoirs with 8″ Tender and Truck Cylinders;
10″ x 33″ " " " 8″ Driver Brake Cylinders ;
12″ x 33″ " " " 10″ Brake Cylinders of all kinds ;
14″ x 33″ " " " 12″ " " " " "
16″ x 33″ " " " 14″ " " " " "
16″ x 42″ " " " 16″ " " " " "

Cylinders Used by the American Brake Company For Different Weights upon Drivers.

8″ Cylinders—Weight on Drivers up to 40000 lbs.;
10″ " " " " from 40000 to 85000 lbs,;
12″ " " " " " 70000 " 115000 "
14″ " " " " " 110000 " 170000 "
16″ " " " " " 145000 " 225000 "

The following table shows the proper sizes of Cylinders to be used with Passenger Cars and Tenders of different weights :

Cylinder for Passenger Car.	Weight of Car.
10″,	Up to 50000 pounds ;
12″,	50000 to 70000 pounds ;
14″,	Above 70000 pounds.
Cylinder for Tenders.	**Weight of Tender.**
8″,	Up to 35000 pounds ;
10″,	Above 35000 pounds.

The American Driver Brake.

Plate 36 illustrates the American Outside Equalized Driver Brake, which has generally superseded the Cam Brake, being simpler in design and in adjustment.

In designing driver brakes, a special effort should be made to avoid the use of brake cylinders requiring a stuffing box, since this is a source of constant trouble, because of the fact that the end of the piston rod is required to travel in the arc of a circle, traced by the end of the long lever arm. As a result, the rod is deflected, wears irregularly and becomes very difficult to pack tightly.

The importance of maintaining a good driver brake cannot be emphasized too strongly, in view of the fact that the driver-brake power developed upon a consolidation engine, weighing 150,000 pounds on the drivers, is 112,500 pounds. A 60,000-pound-capacity, wooden car usually weighs about 30,000 pounds and has a braking power of 70 per cent., or 21,000 pounds. It thus appears that the driver brake alone furnishes more braking power than five such 60,000-pound-capacity cars.

An air pressure of 50 pounds is required in the driver-brake cylinders to secure the full proper braking power. A gauge should be applied to the cylinders, and the piston travel should be so adjusted that auxiliary-reservoir and brake-cylinder pressures equalize at 50 pounds when the brake is fully applied. The piston sleeve or rod on each side of the locomotive should then be distinctly marked next to the cylinder head, while the brakes are applied ; this mark is a reliable guide for future adjustment of the driver brakes.

A test of the cylinders for pressure, leakage, etc., should be made with an air gauge at regular intervals by the person authorized to do this work.

PLATE 36.

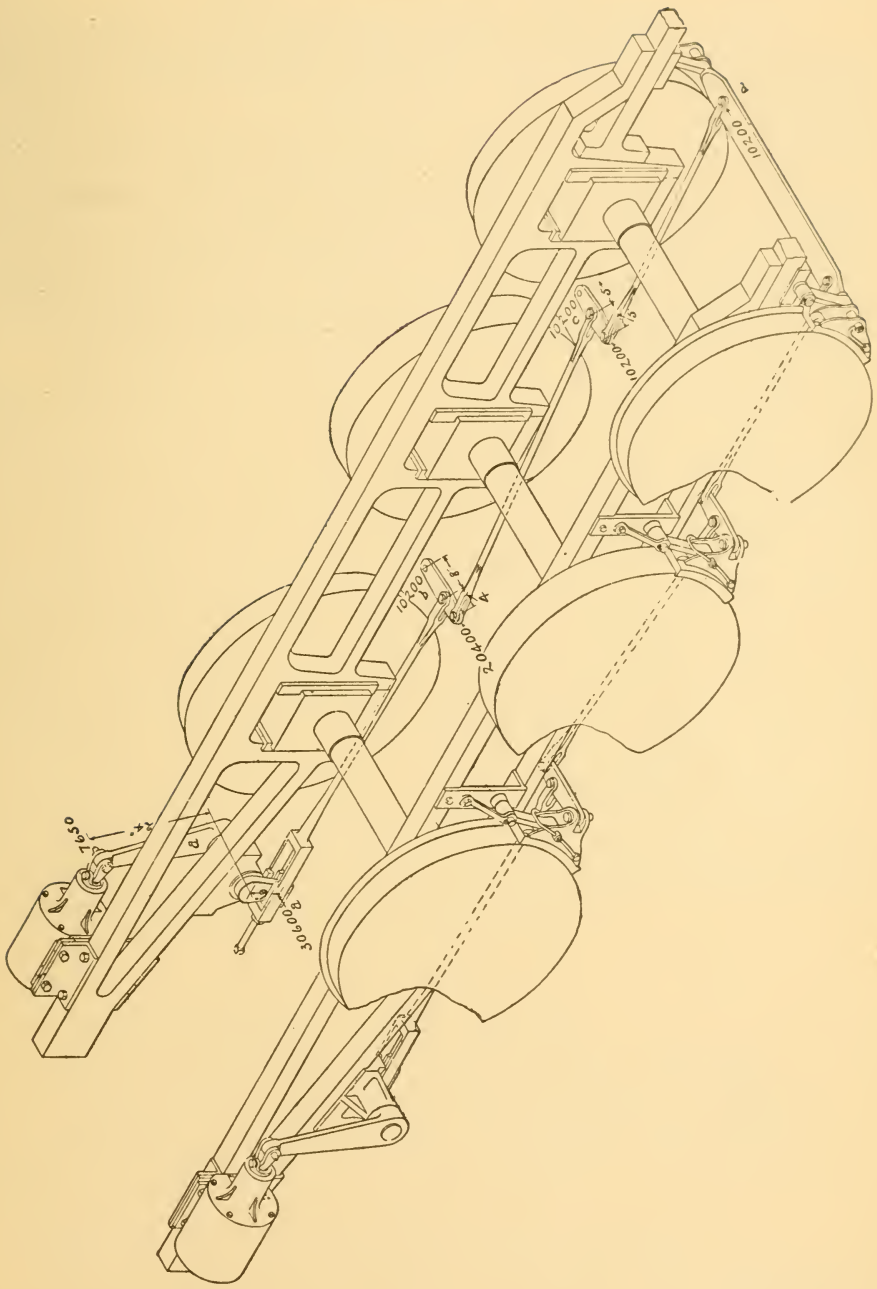

AMERICAN EQUALIZED DRIVER BRAKE.

A light grease has been found the most satisfactory lubricant for driver brake cylinders, especially those located near the fire box.

A well-maintained driver brake with flange shoes will keep the tires in good condition much longer than where the brake receives scant attention. A higher mileage is thereby secured, the cost of repairs is less, and a good driver brake is always a most important essential to a quick stop.

The Cam Driver Brake.

The chief features of the Cam Brake requiring consideration are the maintenance of such a piston travel that auxiliary-reservoir and brake-cylinder pressures shall equalize at 50 pounds when the brakes are fully applied, and of such an adjustment of the cams that their point of contact shall be in line with the piston rod ; otherwise a bending influence will be exerted upon the piston rod.

To adjust the cams, in order to shorten or lengthen the piston travel or to secure a central point of contact, the check nut should be slacked off and the screw turned outward to shorten the piston travel, or inward to lengthen it.

To calculate the braking power, apply the brake and measure the piston travel; then release the brake, insert pieces of ¼-inch steel wire crosswise between the tire and shoe at the upper and lower ends, and again apply the brake; divide the difference of the piston travels by the thickness of the steel, and multiply the result by the total force acting upon the piston. The result is the pressure of one shoe, which, multiplied by 4, gives the total braking power. Divide this total by the total weight upon drivers to obtain the percentage braking power.

EXAMPLE.

Weight on drivers, 53,330 pounds;

Piston travel, without inserting wires, 3 inches;

Piston travel, with ¼-inch wires inserted, 2 inches;

Total force on piston (8-inch-cylinder brake, fully applied), 2,500 pounds.

$1 \div \frac{1}{4} = 4$. $4 \times 2{,}500 = 10{,}000$ pounds.

10,000 pounds $\times$ 4 = 40,000 pounds—the total braking power.

$40{,}000 \div 53{,}330 = 75\%$.

The Locomotive-Truck Brake.

Plate 37 illustrates the American Equalized Locomotive-Truck Brake with Automatic Slack Adjuster. Inasmuch as a considerable proportion of the weight of certain types of locomotives is carried upon the truck, the importance of a well-designed brake upon that part of the equipment is self-evident, especially as the weight upon this truck frequently equals (and often exceeds) the weight of a large-capacity car. This brake should be maintained in a high state of efficiency, which is readily accomplished by the aid of the automatic slack adjuster.

What has been said above, with reference to the maintenance and care of the driver brake, applies with equal force to the truck brake.

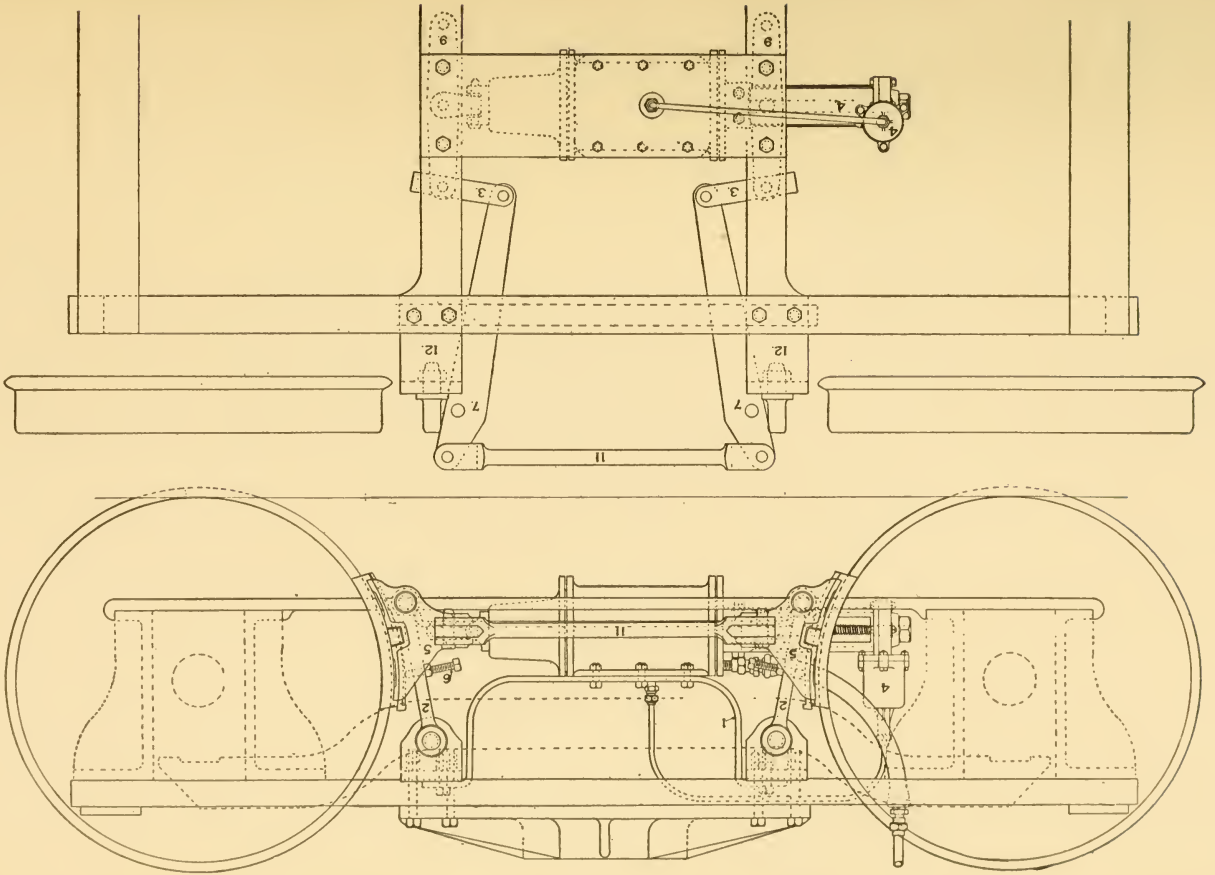

LOCOMOTIVE-TRUCK BRAKE.

(119)

Jan. 9 1883

ONE COPY RECEIVED
JAN 8 1902

LIBRARY OF CONGRESS
0 021 218 370 2